812 Series Quick Action Couplings
Nominal Diameter 13mm

Coupling	Material	Working Temperature
Back Body	Mild Steel (Zinc Plated)	-20°C to +100°C (NBR) -15°C to +200°C (Viton) Depending on Medium
Valve Body	Mild Steel (Zinc Plated)	
Sleeve	Mild Steel (Zinc Plated)	
Spring	Stainless Steel	
Seals	NBR (Viton Available)	

Plugs	Material	Working Pressure
Plug Body	Mild Steel (Zinc Plated)	75 bar working pressure with safety factor of 4:1

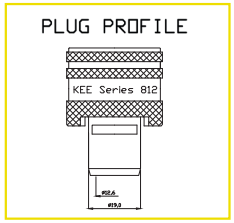

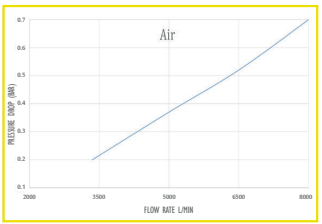

Technical Description:
Quick action bayonet style couplings designed for high pressure compressed air or inert gas.

Advantages:
The fittings connect together by a push and turn motion. Once connected, the spring loaded sleeve secures them together.

Hose Tail Coupling

Termination	Length	Diameter	Part No
3/8"	81	35	812CNHT10SNZ
1/2"	81	35	812CNHT13SNZ
3/4"	88	35	812CNHT19SNZ
1"	95	35	812CNHT25SNZ

Male Thread BSPT Plug

Termination	Length	Diameter	Part No
3/8"	87	35	812PNMT38SNZ
1/2"	87	35	812PNMT12SNZ
3/4"	87	35	812PNMT34SNZ
1"	87	35	812PNMT01SNZ

Male Thread BSPT Coupling

Termination	Length	Diameter	Part No
3/8"	61	35	812CNMT38SNZ
1/2"	61	35	812CNMT12SNZ
3/4"	61	35	812CNMT34SNZ
1"	61	35	812CNMT01SNZ

Female Thread BSPP Coupling

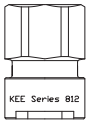

Termination	Length	Diameter	Part No
3/8"	48	35	812CNFP38SNZ
1/2"	48	35	812CNFP12SNZ
3/4"	50	35	812CNFP34SNZ
1"	57	35	812CNFP01SNZ

Female Thread BSPP Plug

Termination	Length	Diameter	Part No
3/8"	74	35	812PNFP38SNZ
1/2"	74	35	812PNFP12SNZ
3/4"	76	35	812PNFP34SNZ
1"	83	35	812PNFP01SNZ

Hose Tail Plug

Termination	Length	Diameter	Part No
3/8"	106	35	812PNHT10SNZ
1/2"	106	35	812PNHT13SNZ
3/4"	114	35	812PNHT19SNZ
1"	120	35	812PNHT25SNZ

HosesDirect
www.hoses.co.uk

www.hoses.co.uk

TODO-MATIC Hose Units - couplings ø 56

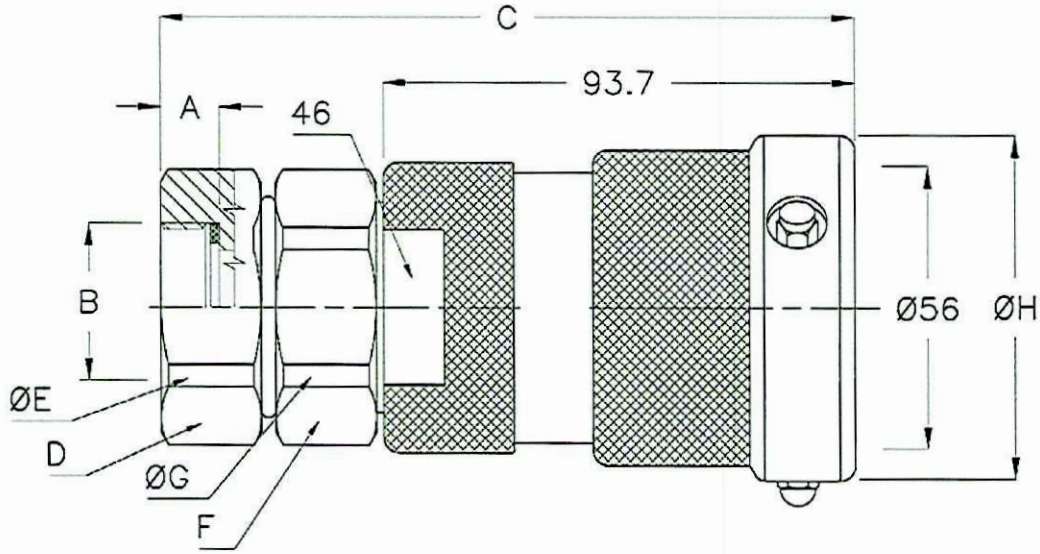

Max coupling pressure: 7 bar / 102 psi.

* NPT thread is a tapered pipe thread, tightening on the tread. Therefore there is no flat seal.

**Sealing material, see page 4

DN / Size	B (connection)	Material	Code No.	Weight	WP Bar / Psi	TP Bar / Psi	TYPE	A	C	D	E	F	G	H
19 / Ø56	3/4" BSP (ISO 228-G 3/4)	Aluminium	7075-14**	0,6 kg / 1,3 lb	10 / 145	15 / 220	-	12	125	42	44	42	44	69
19 / Ø56	3/4" BSP (ISO 228-G 3/4)	Brass	7075-24**	1,6 kg / 3,5 lb	10 / 145	15 / 220	-	12	125	42	44	42	44	69
19 / Ø56	3/4" BSP (ISO 228-G 3/4)	Stainless steel	7075-44**	1,5 kg / 3,3 lb	25 / 365	37,5 / 545	-	12	125	42	44	42	44	63
-- / Ø56	3/4" NPT (ANSI B2.1) *	Aluminium	7454-14**	0,6 kg / 1,3 lb	10 / 145	15 / 220	-	18	131	42	44	42	44	69
-- / Ø56	3/4" NPT (ANSI B2.1) *	Brass	7454-24**	1,6 kg / 3,5 lb	10 / 145	15 / 220	-	18	131	42	44	42	44	69
-- / Ø56	3/4" NPT (ANSI B2.1) *	Stainless steel	7454-44**	1,5 kg / 3,3 lb	25 / 365	37,5 / 545	-	18	131	42	44	42	44	63
25 / Ø56	1" BSP (ISO 228-G 1)	Aluminium	7100-14**	0,6 kg / 1,3 lb	10 / 145	15 / 220	-	12	125	42	44	42	44	69
25 / Ø56	1" BSP (ISO 228-G 1)	Brass	7100-24**	1,5 kg / 3,3 lb	10 / 145	15 / 220	-	12	125	42	44	42	44	69
25 / Ø56	1" BSP (ISO 228-G 1)	Stainless steel	7100-44**	1,4 kg / 3,1 lb	25 / 365	37,5 / 545	-	12	125	42	44	42	44	63
-- / Ø56	1" NPT (ANSI B2.1) *	Aluminium	7455-14**	0,6 kg / 1,3 lb	10 / 145	15 / 220	-	21	134	42	44	42	44	69
-- / Ø56	1" NPT (ANSI B2.1) *	Brass	7455-24**	1,5 kg / 3,3 lb	10 / 145	15 / 220	-	21	134	42	44	42	44	69
-- / Ø56	1" NPT (ANSI B2.1) *	Stainless steel	7455-44**	1,4 kg / 3,1 lb	25 / 365	37,5 / 545	-	21	134	42	44	42	44	63
32 / Ø56	1 1/4" BSP (ISO 228-G 1 1/4)	Aluminium	7125-14**	0,6 kg / 1,3 lb	10 / 145	15 / 220	-	16	136	50	54	50	54	69
32 / Ø56	1 1/4" BSP (ISO 228-G 1 1/4)	Brass	7125-24**	1,6 kg / 3,5 lb	10 / 145	15 / 220	-	16	136	50	54	50	54	69
32 / Ø56	1 1/4" BSP (ISO 228-G 1 1/4)	Stainless steel	7125-44**	1,5 kg / 3,3 lb	25 / 365	37,5 / 545	-	16	136	50	54	50	54	63
-- / Ø56	1 1/4" NPT (ANSI B2.1) *	Aluminium	7456-14**	0,6 kg / 1,3 lb	10 / 145	15 / 220	-	21	141	50	54	50	54	69
-- / Ø56	1 1/4" NPT (ANSI B2.1) *	Brass	7456-24**	1,6 kg / 3,5 lb	10 / 145	15 / 220	-	21	141	50	54	50	54	69
-- / Ø56	1 1/4" NPT (ANSI B2.1) *	Stainless steel	7456-44**	1,5 kg / 3,3 lb	25 / 365	37,5 / 545	-	21	141	50	54	50	54	63

HosesDirect
www.hoses.co.uk

www.hoses.co.uk

All rights to change without notice is reserved

TODO-MATIC Hose Units - couplings ø 70

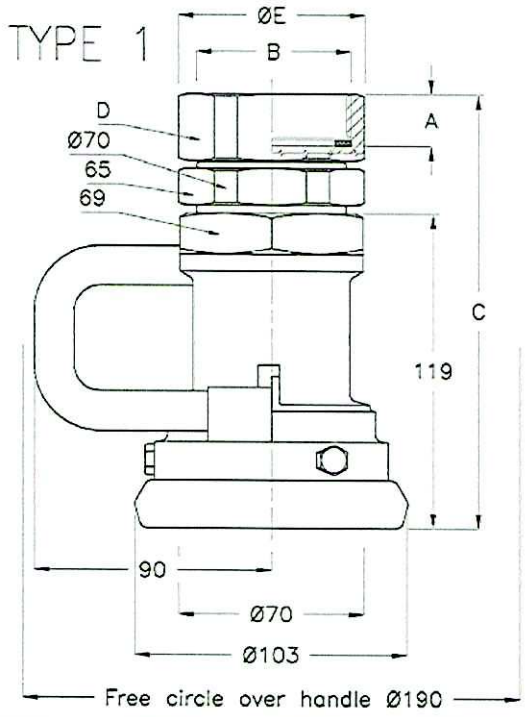

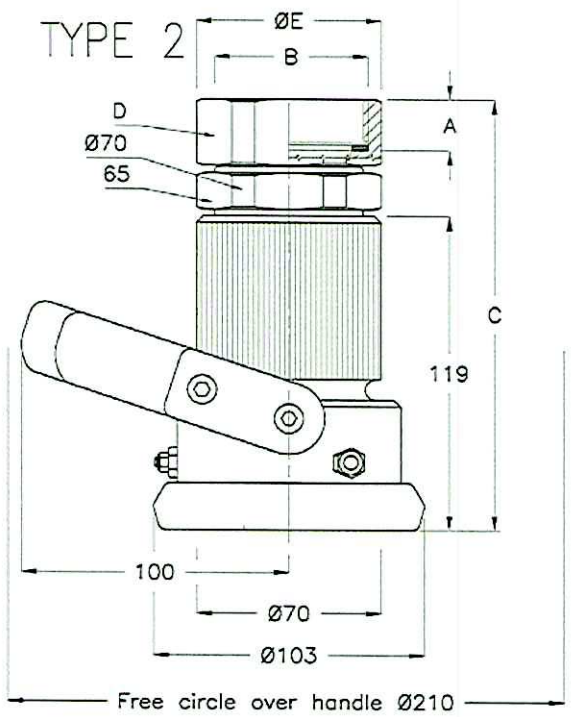

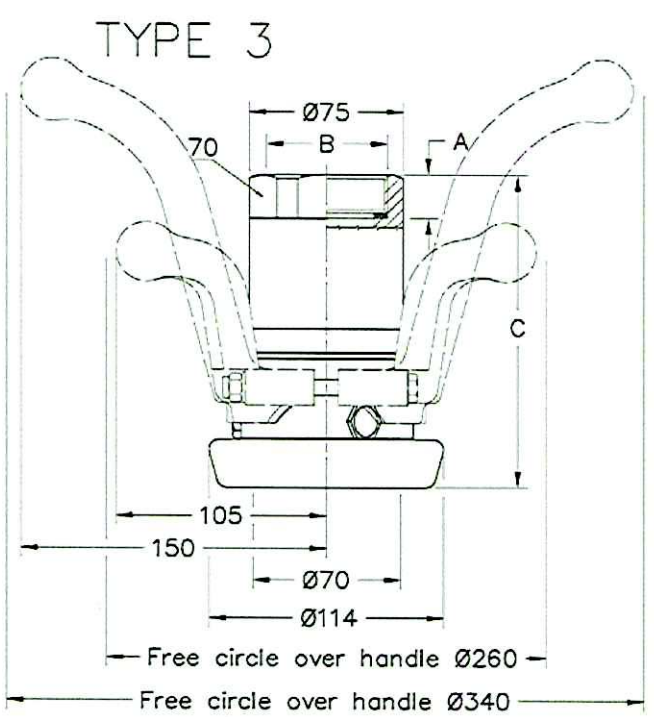

Max coupling pressure: 7 bar / 102 psi.
**Sealing material, see page 4

* NPT thread is a tapered pipe thread, tightening on the tread. Therefore there is no flat seal.
*** Is available with both short and long handles.

DN / Size	B (connection)	Material	Code No.	Weight	WP Bar / Psi	TP Bar / Psi	TYPE	A	C	D	E	F	G	H
40 / Ø70	1 1/2" BSP (ISO 228-G 1 1/2)	Aluminium	5005A-14**	1,1 kg / 2,4 lb	10 / 145	15 / 220	1	18	159	60	67	-	-	-
40 / Ø70	1 1/2" BSP (ISO 228-G 1 1/2)	Gunmetal	5005A-24**	2,6 kg / 5,7 lb	10 / 145	15 / 220	1	18	159	60	67	-	-	-
40 / Ø70	1 1/2" BSP (ISO 228-G 1 1/2)	Stainless steel	9150G-44**	2,9 kg / 6,4 lb	25 / 365	37,5 / 545	2	18	159	60	67	-	-	-
-- / Ø70	1 1/2" NPT (ANSI B2.1) *	Aluminium	7468A-14**	1,1 kg / 2,4 lb	10 / 145	15 / 220	1	21	161	60	67	-	-	-
-- / Ø70	1 1/2" NPT (ANSI B2.1) *	Gunmetal	7468A-24**	2,6 kg / 5,7 lb	10 / 145	15 / 220	1	21	161	60	67	-	-	-
-- / Ø70	1 1/2" NPT (ANSI B2.1) *	Stainless steel	9151G-44**	2,9 kg / 6,4 lb	25 / 365	37,5 / 545	2	21	161	60	67	-	-	-
50 / Ø70	2" BSP (ISO 228-G 2)	Aluminium	5006A-14**	1,2 kg / 2,6 lb	10 / 145	15 / 220	1	20	160	65	70	-	-	-
50 / Ø70	2" BSP (ISO 228-G 2)	Gunmetal	5006A-24**	2,8 kg / 6,2 lb	10 / 145	15 / 220	1	20	160	65	70	-	-	-
50 / Ø70	2" BSP (ISO 228-G 2)	Stainless steel	9200G-44**	2,9 kg / 6,4 lb	25 / 365	37,5 / 545	2	20	160	65	70	-	-	-
-- / Ø70	2" NPT (ANSI B2.1) *	Aluminium	7469A-14**	1,2 kg / 2,6 lb	10 / 145	15 / 220	1	21,5	162	65	70	-	-	-
-- / Ø70	2" NPT (ANSI B2.1) *	Gunmetal	7469A-24**	2,8 kg / 6,2 lb	10 / 145	15 / 220	1	21,5	162	65	70	-	-	-
-- / Ø70	2" NPT (ANSI B2.1) *	Stainless steel	9201G-44**	2,9 kg / 6,4 lb	25 / 365	37,5 / 545	2	21,5	162	65	70	-	-	-
50 / Ø70	2" BSP (ISO 228-G 2)	Stainless steel	9209-44**	3,4 kg / 7,5 lb	25 / 365	37,5 / 545	3***	20	154	-	-	-	-	-
-- / Ø70	2" NPT (ANSI B2.1) *	Stainless steel	9205-44**	3,4 kg / 7,5 lb	25 / 365	37,5 / 545	3***	21,5	154	-	-	-	-	-

HosesDirect
www.hoses.co.uk

www.hoses.co.uk
All rights to change without notice is reserved

TODO-MATIC Hose Units - couplings ø 70

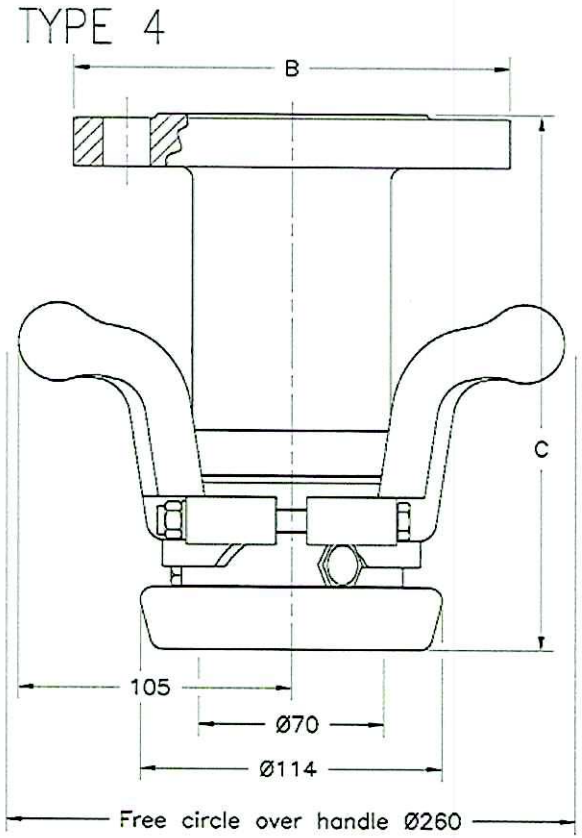

Max coupling pressure: 7 bar / 102 psi.
** Sealing material, see page 4

DN / Size	B (connection)	Material	Code No.	Weight	WP Bar / Psi	TP Bar / Psi	TYPE	A	C	D	E	F	G	H
50 / Ø70	EN 1092-1 PN 10/16 Type D	Stainless steel	9078-44**	7,0 kg / 15,4 lb	16 / 232	37,5 /545	-	-	204	-	-	-	-	-
40 / Ø70	EN 1092-1 PN 10/16 - 25/40 Type B	Stainless steel	9167-44**	7,0 kg / 15,4 lb	25 / 365	37,5 /545	-	-	204	-	-	-	-	-
50 / Ø70	EN 1092-1 PN 25/40 Type F	Stainless steel	9206-44**	7,0 kg / 15,4 lb	25 / 365	37,5 /545	-	-	206	-	-	-	-	-
-- / Ø70	ANSI B16.5 2" ASA 300 PSI	Stainless steel	9207-44**	7,0 kg / 15,4 lb	25 / 365	37,5 /545	-	-	206	-	-	-	-	-
-- / Ø70	ANSI B16.5 2" ASA 150 PSI	Stainless steel	9208-44**	7,0 kg / 15,4 lb	16 / 232	37,5 /545	-	-	203	-	-	-	-	-
50 / Ø70	EN 1092-1 PN 10/16 Type B	Stainless steel	9216-44**	7,0 kg / 15,4 lb	16 / 232	37,5 /545	-	-	202	-	-	-	-	-
50 / Ø70	EN 1092-1 PN 25/40 Type B	Stainless steel	9217-44**	7,0 kg / 15,4 lb	25 / 365	37,5 /545	-	-	204	-	-	-	-	-
50 / Ø70	EN 1092-1 PN 25/40 Type C	Stainless steel	9077-44**	7,0 kg / 15,4 lb	25 / 365	37,5 /545	-	-	204	-	-	-	-	-

HosesDirect
www.hoses.co.uk

www.hoses.co.uk
All rights to change without notice is reserved

TODO-MATIC Hose Units - couplings ø 105

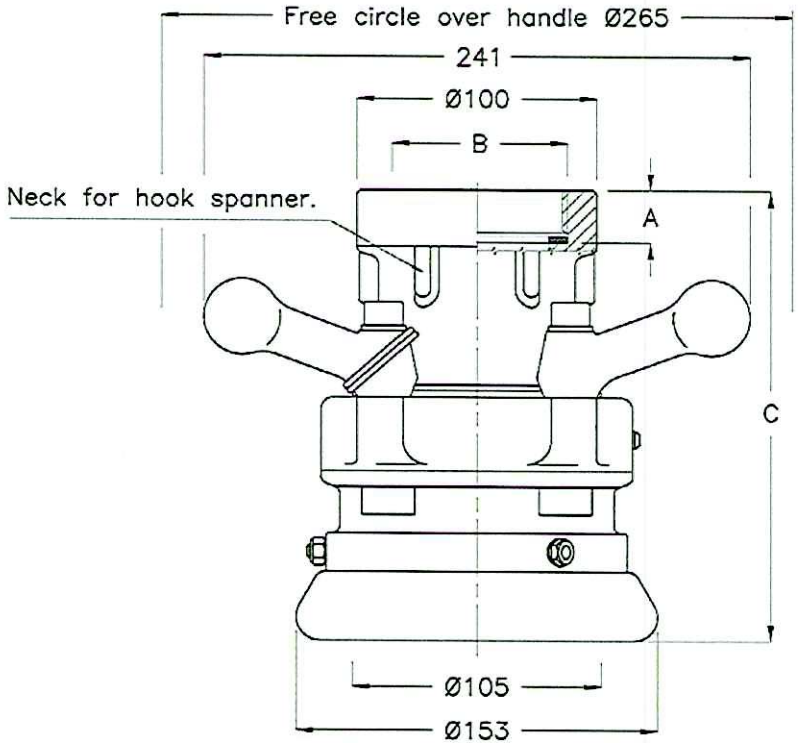

Max coupling pressure: 7 bar / 102 psi.
** Sealing material, see page 4

* NPT thread is a tapered pipe thread, tightening on the tread. Therefore there is no flat seal.

DN / Size	B (connection)	Material	Code No.	Weight	WP Bar / Psi	TP Bar / Psi	TYPE	A	C	D	E	F	G	H
65 / Ø105	2 1/2" BSP (ISO 228-G 2 1/2)	Aluminium	5332G-13**	4,3 kg / 9,5 lb	10 / 145	15 / 220	-	22	190	-	-	-	-	-
65 / Ø105	2 1/2" BSP (ISO 228-G 2 1/2)	Gunmetal	5332G-24**	8,8 kg / 19,4 lb	10 / 145	15 / 220	-	22	190	-	-	-	-	-
65 / Ø105	2 1/2" BSP (ISO 228-G 2 1/2)	Stainless steel	9250G-44**	7,4 kg / 16,3 lb	25 / 365	37,5 / 545	-	22	177	-	-	-	-	-
-- / Ø105	2 1/2" NPT (ANSI B2.1) *	Aluminium	7472G-13**	4,3 kg / 9,5 lb	10 / 145	15 / 220	-	30	216	-	-	-	-	-
-- / Ø105	2 1/2" NPT (ANSI B2.1) *	Gunmetal	7472G-24**	8,8 kg / 19,4 lb	10 / 145	15 / 220	-	30	216	-	-	-	-	-
-- / Ø105	2 1/2" NPT (ANSI B2.1) *	Stainless steel	9251G-44**	7,4 kg / 16,3 lb	25 / 365	37,5 / 545	-	30	208	-	-	-	-	-
80 / Ø105	3" BSP (ISO 228-G 3)	Aluminium	5432G-13**	4,2 kg / 9,3 lb	10 / 145	15 / 220	-	22	190	-	-	-	-	-
80 / Ø105	3" BSP (ISO 228-G 3)	Gunmetal	5432G-24**	8,5 kg / 18,7 lb	10 / 145	15 / 220	-	22	190	-	-	-	-	-
80 / Ø105	3" BSP (ISO 228-G 3)	Stainless steel	9260G-44**	7,4 kg / 16,3 lb	25 / 365	37,5 / 545	-	22	180	-	-	-	-	-
-- / Ø105	3" NPT (ANSI B 2.1) *	Aluminium	7473G-13**	4,2 kg / 9,3 lb	10 / 145	15 / 220	-	32	200	-	-	-	-	-
-- / Ø105	3" NPT (ANSI B 2.1) *	Gunmetal	7473G-24**	8,5 kg / 18,7 lb	10 / 145	15 / 220	-	32	200	-	-	-	-	-
-- / Ø105	3" NPT (ANSI B 2.1) *	Stainless steel	9261G-44**	7,4 kg / 16,3 lb	25 / 365	37,5 / 545	-	32	187	-	-	-	-	-

HosesDirect
www.hoses.co.uk

www.hoses.co.uk
All rights to change without notice is reserved

TODO-MATIC Hose Units - couplings ø 119

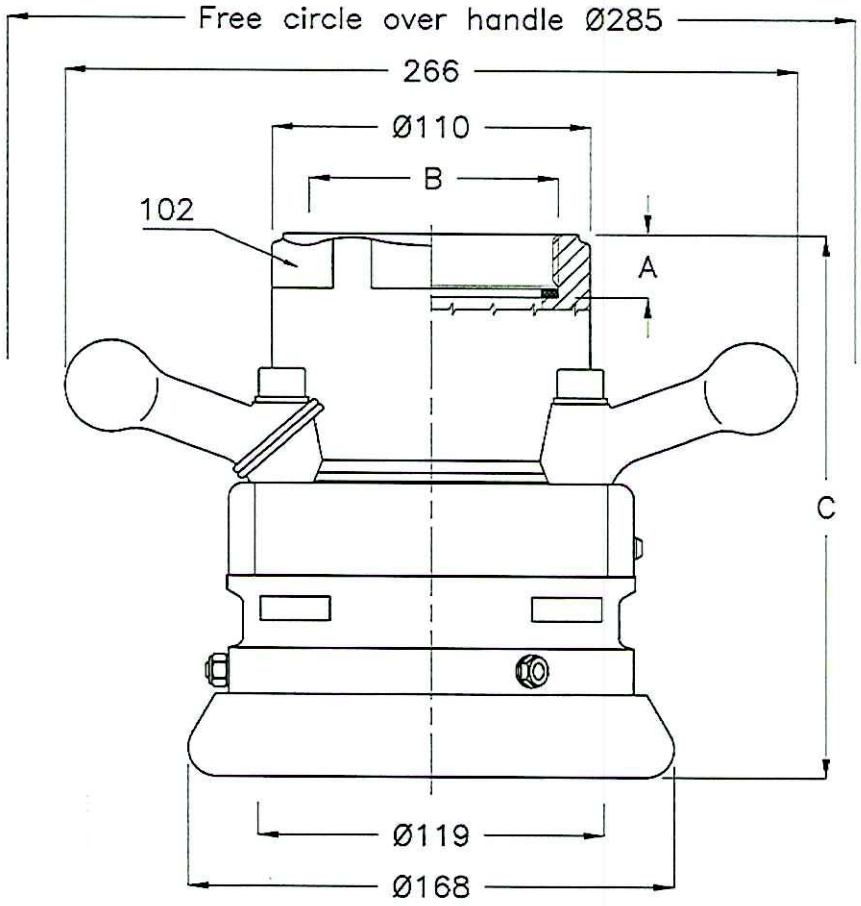

Max coupling pressure: 7 bar / 102 psi.
** Sealing material, see page 4

* NPT thread is a tapered pipe thread, tightening on the tread. Therefore there is no flat seal.

DN / Size	B (connection)	Material	Code No.	Weight	WP Bar / Psi	TP Bar / Psi	TYPE	A	C	D	E	F	G	H
80 / Ø119	3" BSP (ISO 228-G 3)	Aluminium	5532F-13**	4,9 kg / 10,8 lb	10 / 145	15 / 220	-	22	190	-	-	-	-	-
80 / Ø119	3" BSP (ISO 228-G 3)	Gunmetal	5532F-24**	10,2 kg / 22,5 lb	10 / 145	15 / 220	-	22	190	-	-	-	-	-
80 / Ø119	3" BSP (ISO 228-G 3)	Stainless steel	9300F-44**	8,8 kg / 19,4 lb	25 / 365	37,5 / 545	-	22	190	-	-	-	-	-
-- / Ø119	3" NPT (ANSI B2.1) *	Aluminium	7475F-13**	4,9 kg / 10,8 lb	10 / 145	15 / 220	-	32	199	-	-	-	-	-
-- / Ø119	3" NPT (ANSI B2.1) *	Gunmetal	7475F-24**	10,2 kg / 22,5 lb	10 / 145	15 / 220	-	32	199	-	-	-	-	-
-- / Ø119	3" NPT (ANSI B2.1) *	Stainless steel	9301F-44**	8,8 kg / 19,4 lb	25 / 365	37,5 / 545	-	32	199	-	-	-	-	-

HosesDirect
www.hoses.co.uk

www.hoses.co.uk
All rights to change without notice is reserved

TODO-MATIC Hose Units - couplings ø 119

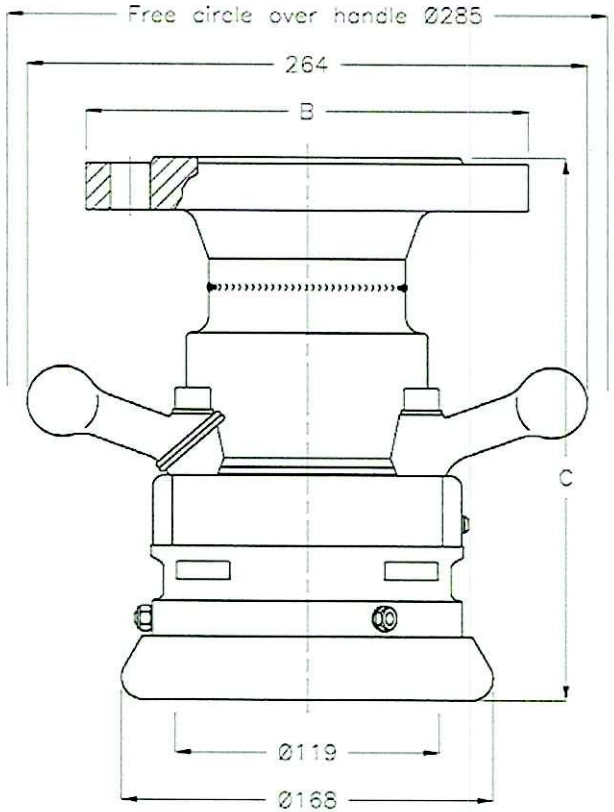

Max coupling pressure: 7 bar / 102 psi.
** Sealing material, see page 4

DN / Size	B (connection)	Material	Code No.	Weight	WP Bar / Psi	TP Bar / Psi	TYPE	A	C	D	E	F	G	H
80 / Ø119	EN 1092-1 PN 10/16 Type B	Stainless steel	9316F-44**	13,5 kg / 29,8 lb	16 / 232	37,5 / 545	-	-	239	-	-	-	-	-
80 / Ø119	EN 1092-1 PN 10/16 Type C	Stainless steel	9088F-44**	13,5 kg / 29,8 lb	16 / 232	37,5 / 545	-	-	260	-	-	-	-	-
80 / Ø119	EN 1092-1 PN 25/40 Type B	Stainless steel	9317F-44**	13,5 kg / 29,8 lb	25 / 365	37,5 / 545	-	-	247	-	-	-	-	-
80 / Ø119	EN 1092-1 PN 25/40 Type C	Stainless steel	9090F-44**	13,5 kg / 29,8 lb	25 / 365	37,5 / 545	-	-	247	-	-	-	-	-
80 / Ø119	EN 1092-1 PN 25/40 Type F	Stainless steel	9367F-44**	13,6 kg / 30,0 lb	25 / 365	37,5 / 545	-	-	247	-	-	-	-	-
-- / Ø119	ANSI B16.5 3" ASA 150 PSI	Stainless steel	9360F-44**	14,2 kg / 31,3 lb	16 / 232	37,5 / 545	-	-	259	-	-	-	-	-
-- / Ø119	ANSI B16.5 3" ASA 300 PSI	Stainless steel	9361F-44**	14,2 kg / 31,3 lb	25 / 365	37,5 / 545	-	-	259	-	-	-	-	-

HosesDirect
www.hoses.co.uk

www.hoses.co.uk
All rights to change without notice is reserved

TODO-MATIC Hose Units - couplings ø 164

TYPE 1

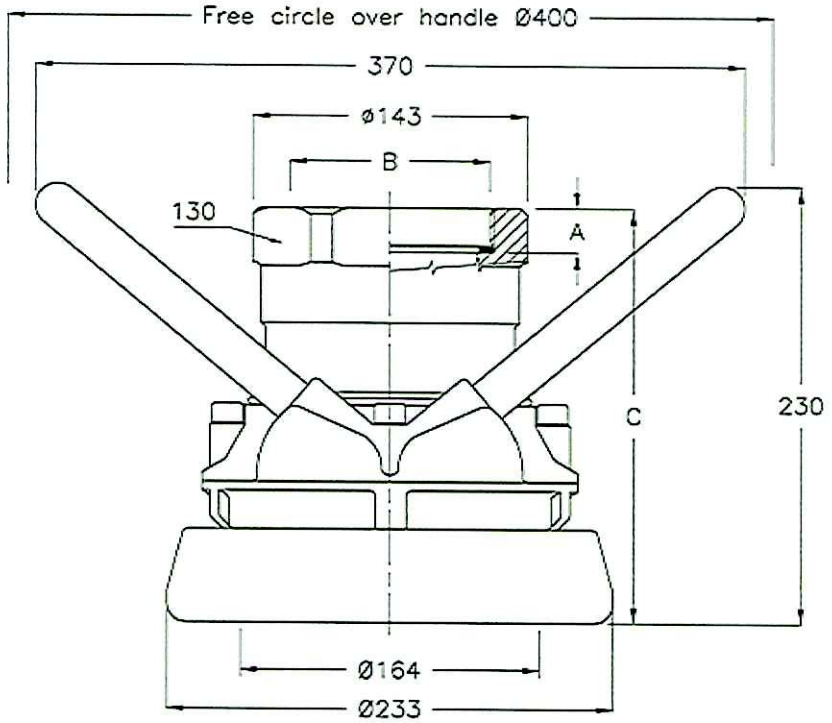

TYPE 2

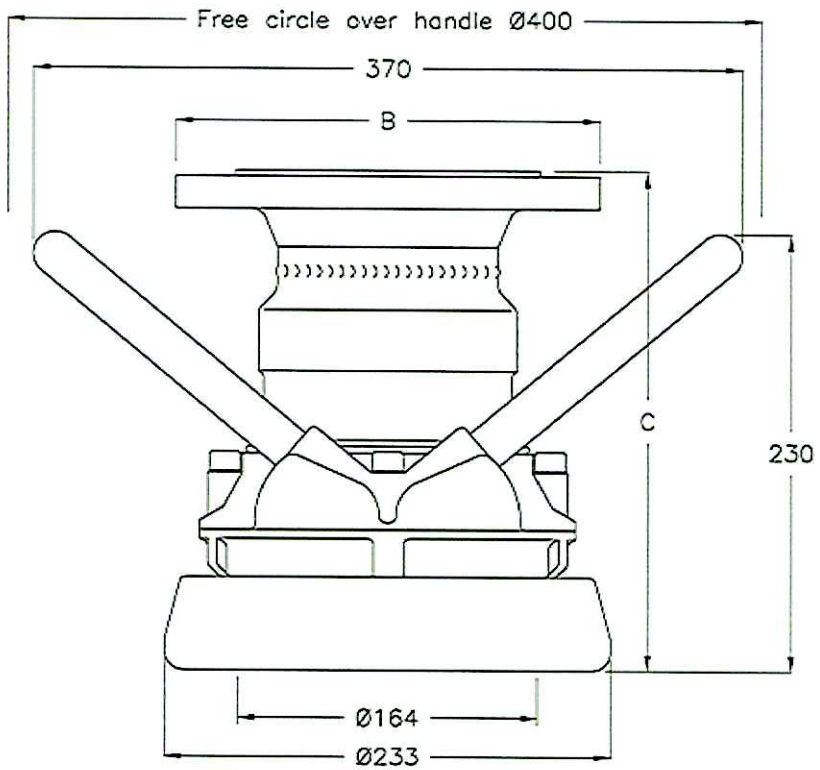

Max coupling pressure: 6 bar / 102 psi.
** Sealing material, see page 4

* NPT thread is a tapered pipe thread, tightening on the tread. Therefore there is no flat seal.

DN / Size	B (connection)	Material	Code No.	Weight	WP Bar / Psi	TP Bar / Psi	TYPE	A	C	D	E	F	G	H
100 / Ø164	4" BSP (ISO 228-G 4)	Aluminium	5632G-13**	9,5 kg / 20,9 lb	10 / 145	15 / 220	1	24	220	-	-	-	-	-
100 / Ø164	4" BSP (ISO 228-G 4)	Gunmetal	5632G-24**	20,6 kg / 45,4 lb	10 / 145	15 / 220	1	24	220	-	-	-	-	-
100 / Ø164	4" BSP (ISO 228-G 4)	Stainless steel	9400-44**	17,6 kg / 38,8 lb	25 / 365	37,5 / 545	1	24	220	-	-	-	-	-
-- / Ø164	4" NPT(ANSI B2.1) *	Aluminium	7477G-13**	9,5 kg / 20,9 lb	10 / 145	15 / 220	1	34	230	-	-	-	-	-
-- / Ø164	4" NPT(ANSI B2.1) *	Gunmetal	7477G-24**	20,6 kg / 45,4 lb	10 / 145	15 / 220	1	34	230	-	-	-	-	-
-- / Ø164	4" NPT(ANSI B2.1) *	Stainless steel	9401-44**	17,6 kg / 38,8 lb	25 / 365	37,5 / 545	1	34	230	-	-	-	-	-
100 / Ø164	EN 1092-1 PN 10/16 Type B	Stainless steel	9416-44**	20,0 kg / 44,1 lb	16 / 232	37,5 / 545	2	-	261	-	-	-	-	-

HosesDirect
www.hoses.co.uk

www.hoses.co.uk

All rights to change without notice is reserved

TODO-MATIC Hose Units - couplings ø 238

TYPE 1

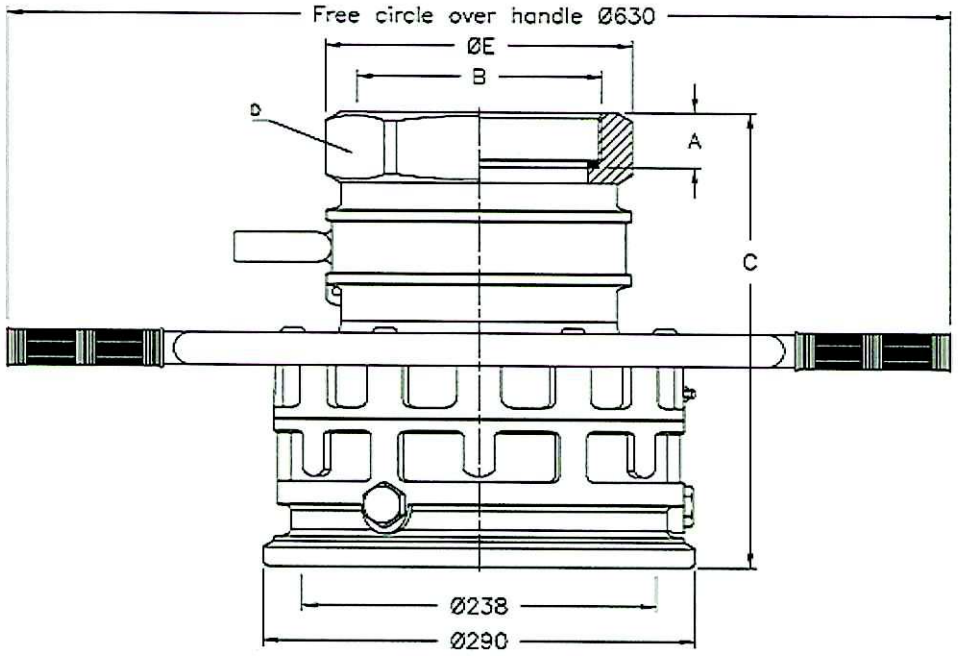

TYPE 2

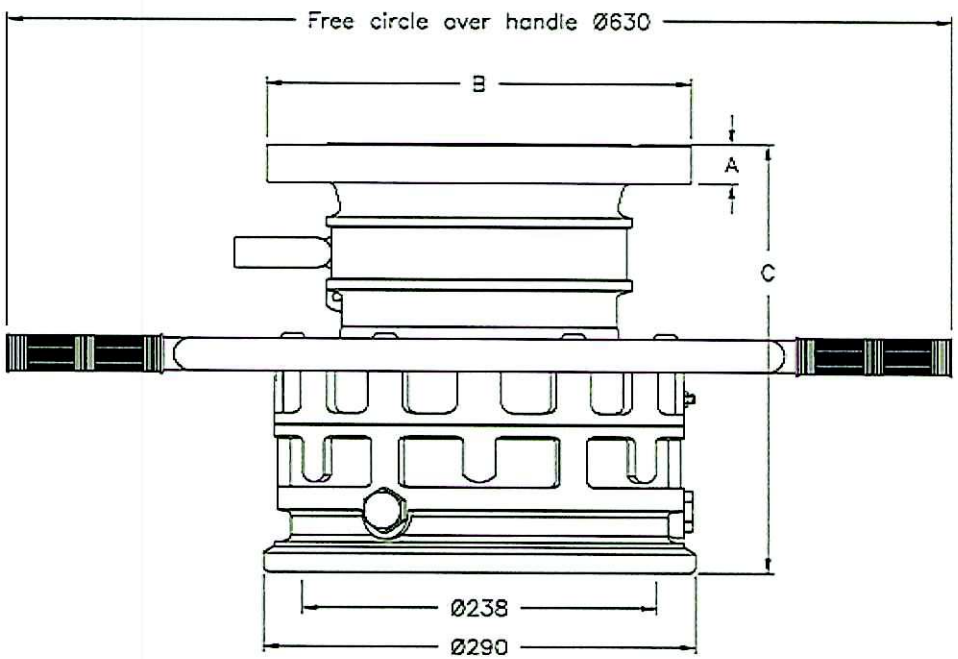

Max coupling pressure: 7 bar / 102 psi.
***Drilled according to Standard only

* NPT thread is a tapered pipe thread, tightening on the tread. Therefore there is no flat seal.
** Sealing material, see page 4

DN / Size	B (connection)	Material	Code No.	Weight	WP Bar / Psi	TP Bar / Psi	TYPE	A	C	D	E	F	G	H
150 / Ø 238	6" BSP (ISO 228-G 6)	Aluminium	7200-14**	24,6 kg / 54,2 lb	10 / 145	15 / 220	1	35	308	190	205	-	-	-
150 / Ø 238	6" BSP (ISO 228-G 6)	Gunmetal	7200-24**	52,0 kg / 114,6 lb	10 / 145	15 / 220	1	35	308	190	205	-	-	-
150 / Ø 238	6" BSP (ISO 228-G 6)	Stainless steel	7200E-44**	48,2 kg / 106,3 lb	10 / 145	15 / 220	1	35	308	190	205	-	-	-
-- / Ø 238	6" NPT (ANSI B2.1)	Aluminium	7201-14**	25,0 kg / 55,1 lb	10 / 145	15 / 220	1	37	308	190	205	-	-	-
-- / Ø 238	6" NPT (ANSI B2.1) *	Gunmetal	7201-24**	52,0 kg / 114,6 lb	10 / 145	15 / 220	1	37	308	190	205	-	-	-
-- / Ø 238	6" NPT (ANSI B2.1) *	Stainless steel	7201E-44**	48,2 kg / 106,3 lb	10 / 145	15 / 220	1	37	308	190	205	-	-	-
150 / Ø 238	EN 1092-1*** PN 10/16 Type B	Aluminium	7202-14**	25,0 kg / 55,1 lb	10 / 145	15 / 220	2	24	280	-	-	-	-	-

HosesDirect
www.hoses.co.uk

www.hoses.co.uk
All rights to change without notice is reserved

TODO-MATIC Tank Units - couplings ø 56

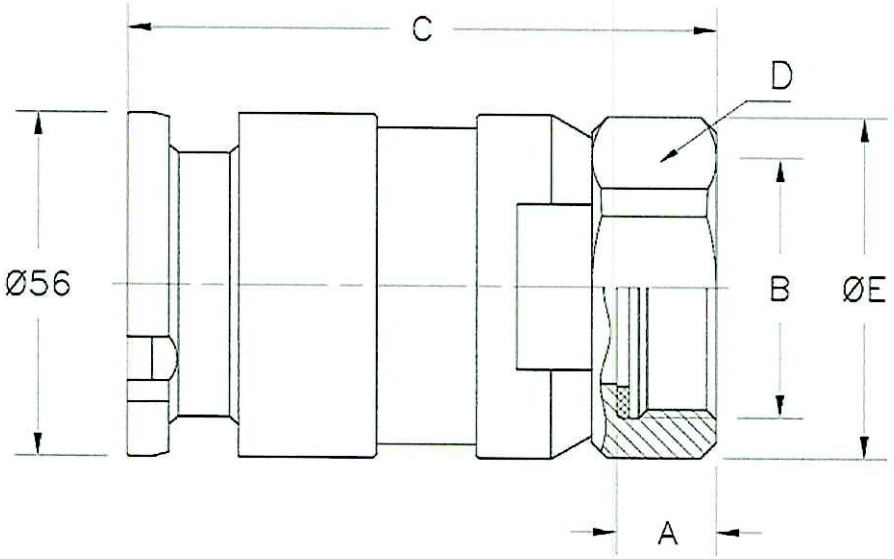

Max coupling pressure: 7 bar / 102 psi.
**Sealing material, see page 4

* NPT thread is a tapered pipe thread, tightening on the tread. Therefore there is no flat seal.

DN / Size	B (connection)	Material	Code No.	Weight	WP Bar / Psi	TP Bar / Psi	TYPE	A	C	D	E	F	G	H
19 / Ø56	3/4" BSP (ISO 228-G 3/4)	Aluminium	5823A-11**	0,3 kg / 0,7 lb	10 / 145	15 / 220	-	12	86,5	42	47	-	-	-
19 / Ø56	3/4" BSP (ISO 228-G 3/4)	Brass	5823A-22**	0,9 kg / 2,0 lb	10 / 145	15 / 220	-	12	86,5	42	47	-	-	-
19 / Ø56	3/4" BSP (ISO 228-G 3/4)	Stainless steel	5823A-44**	0,8 kg / 1,8 lb	25 /365	37,5 / 545	-	12	86,5	42	47	-	-	-
19 / Ø56	3/4" NPT (ANSI B2.1) *	Aluminium	7450A-11**	0,3 kg / 0,7 lb	10 / 145	15 / 220	-	18	92	42	47	-	-	-
19 / Ø56	3/4" NPT (ANSI B2.1) *	Brass	7450A-22**	0,9 kg / 2,0 lb	10 / 145	15 / 220	-	18	92	42	47	-	-	-
19 / Ø56	3/4" NPT (ANSI B2.1) *	Stainless steel	7450A-44**	0,8 kg / 1,8 lb	25 /365	37,5 / 545	-	18	92	42	47	-	-	-
25 / Ø56	1" BSP (ISO 228-G 1)	Aluminium	4942A-11**	0,2 kg / 0,4 lb	10 / 145	15 / 220	-	12	82,5	42	45	-	-	-
25 / Ø56	1" BSP (ISO 228-G 1)	Brass	4942A-22**	0,7 kg / 1,5 lb	10 / 145	15 / 220	-	12	82,5	42	45	-	-	-
25 / Ø56	1" BSP (ISO 228-G 1)	Stainless steel	4942A-44**	0,6 kg / 1,3 lb	25 /365	37,5 / 545	-	12	82,5	42	45	-	-	-
25 / Ø56	1" NPT (ANSI B2.1) *	Aluminium	7451A-11**	0,2 kg / 0,4 lb	10 / 145	15 / 220	-	21	91	42	45	-	-	-
25 / Ø56	1" NPT (ANSI B2.1) *	Brass	7451A-22**	0,7 kg / 1,5 lb	10 / 145	15 / 220	-	21	91	42	45	-	-	-
25 / Ø56	1" NPT (ANSI B2.1) *	Stainless steel	7451A-44**	0,6 kg / 1,3 lb	25 /365	37,5 / 545	-	21	91	42	45	-	-	-
32 / Ø56	1 1/4" BSP (ISO 228-G 1 1/4)	Aluminium	4992A-11**	0,2 kg / 0,4 lb	10 / 145	15 / 220	-	16	94,5	50	55	-	-	-
32 / Ø56	1 1/4" BSP (ISO 228-G 1 1/4)	Brass	4992A-22**	0,6 kg / 1,3 lb	10 / 145	15 / 220	-	16	94,5	50	55	-	-	-
32 / Ø56	1 1/4" BSP (ISO 228-G 1 1/4)	Stainless steel	4992A-44**	0,5 kg / 1,1 lb	25 /365	37,5 / 545	-	16	94,5	50	55	-	-	-
32 / Ø56	1 1/4" NPT (ANSI B2.1) *	Aluminium	7452A-11**	0,2 kg / 0,4 lb	10 / 145	15 / 220	-	21	99,5	50	55	-	-	-
32 / Ø56	1 1/4" NPT (ANSI B2.1) *	Brass	7452A-22**	0,6 kg / 1,3 lb	10 / 145	15 / 220	-	21	99,5	50	55	-	-	-
32 / Ø56	1 1/4" NPT (ANSI B2.1) *	Stainless steel	7452A-44**	0,5 kg / 1,1 lb	25 /365	37,5 / 545	-	21	99,5	50	55	-	-	-

HosesDirect
www.hoses.co.uk

www.hoses.co.uk
All rights to change without notice is reserved

TODO-MATIC Tank Units - couplings ø 56

TYPE 1

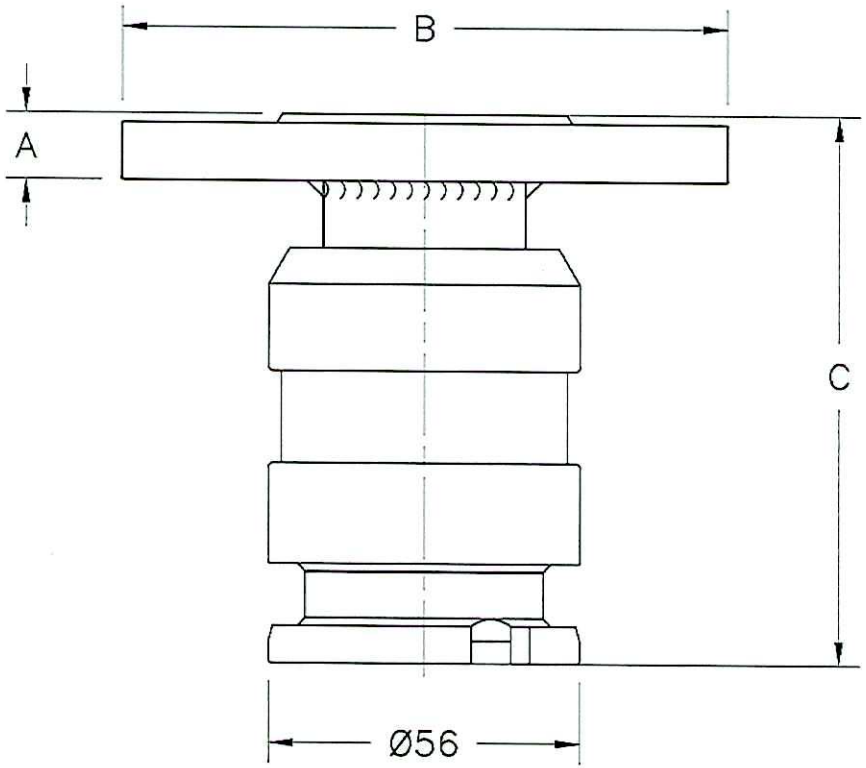

TYPE 2

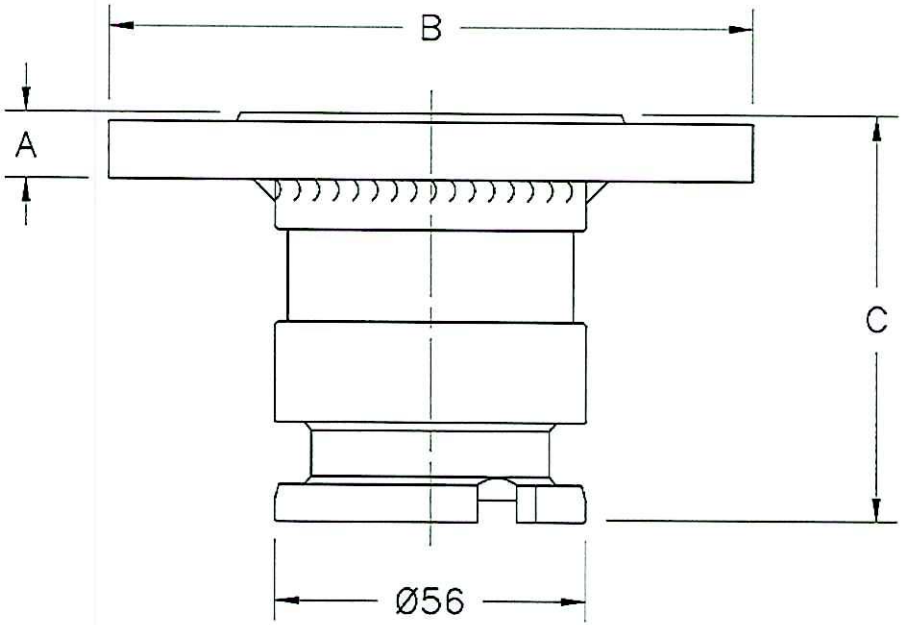

Max coupling pressure: 7 bar / 102 psi.
**Sealing material, see page 4

DN / Size	B (connection)	Material	Code No.	Weight	WP Bar / Psi	TP Bar / Psi	TYPE	A	C	D	E	F	G	H
20 / Ø 56	EN 1092-1 PN 10/16 - 25/40 Type B	Stainless steel	4867A-44**	1,4 kg / 3,1 lb	25 / 365	37,5 / 545	1	16	103	-	-	-	-	-
25 / Ø 56	EN 1092-1 PN 10/16 - 25/40 Type B	Stainless steel	4868A-44**	1,4 kg / 3,1 lb	25 / 365	37,5 / 545	2	12	73,5	-	-	-	-	-
40 / Ø 56	EN 1092-1 PN 10/16 - 25/40 Type B	Stainless steel	4870A-44**	2,0 kg / 4,4 lb	25 / 365	37,5 / 545	2	12	73,5	-	-	-	-	-
50 / Ø 56	EN 1092-1 PN 10/16 Type B	Stainless steel	4879A-44**	2,9 kg / 6,4 lb	16 / 232	37,5 / 545	2	12	73,5	-	-	-	-	-
25 / Ø 56	EN 1092-1 PN 10/16 - 25/40 Type C	Stainless steel	4897A-44**	1,4 kg / 3,1 lb	25 / 365	37,5 / 545	2	18	79,5	-	-	-	-	-
50 / Ø 56	EN 1092-1 PN 25/40 Type E	Stainless steel	7601A-44**	2,6 kg / 5,7 lb	25 / 365	37,5 / 545	2	20	81,5	-	-	-	-	-
-- / Ø 56	ANSI B16.5 3/4" ASA 150 PSI	Stainless steel	4863A-44**	1,2 kg / 2,6 lb	16 / 232	37,5 / 545	1	12	98,5	-	-	-	-	-
-- / Ø 56	ANSI B16.5 1" ASA 150 PSI	Stainless steel	4864A-44**	1,4 kg / 3,1 lb	16 / 232	37,5 / 545	1	12	98,5	-	-	-	-	-
-- / Ø 56	ANSI B16.5 1 1/2" ASA 150 PSI	Stainless steel	4866A-44**	1,4 kg / 3,1 lb	16 / 232	37,5 / 545	2	12	73,5	-	-	-	-	-
-- / Ø 56	ANSI B16.5 1" ASA 300 PSI	Stainless steel	4859A-44**	1,5 kg / 3,3 lb	25 / 365	37,5 / 545	2	17.5	79					

HosesDirect
www.hoses.co.uk

www.hoses.co.uk
All rights to change without notice is reserved

TODO-MATIC Tank Units - couplings ø 70

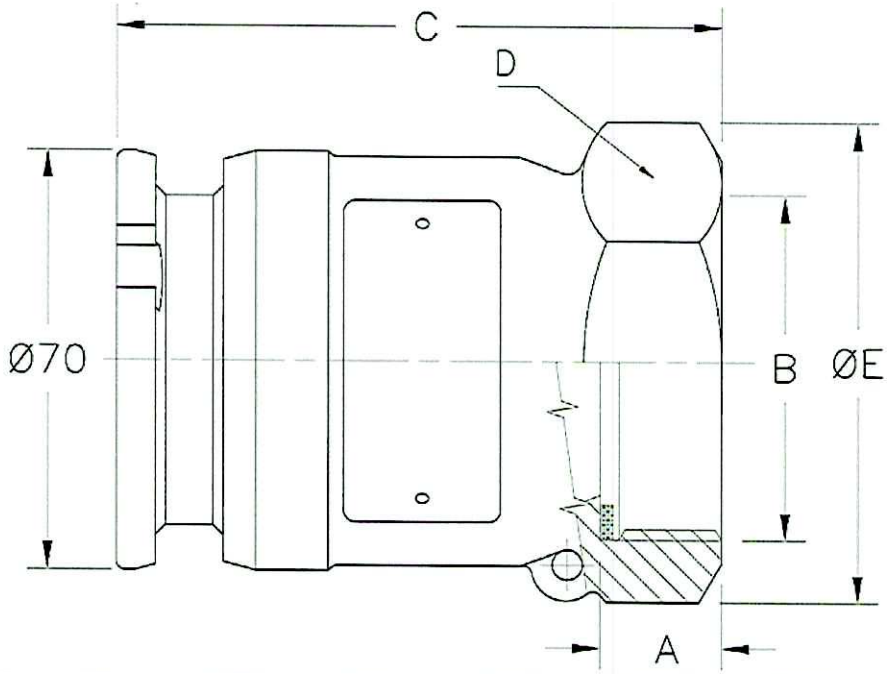

Max coupling pressure: 7 bar / 102 psi.
**Sealing material, see page 4

* NPT thread is a tapered pipe thread, tightening on the tread. Therefore there is no flat seal.

DN / Size	B (connection)	Material	Code No.	Weight	WP Bar / Psi	TP Bar / Psi	TYPE	A	C	D	E	F	G	H
40 / Ø70	1 1/2" BSP (ISO 228-G 1 1/2")	Aluminium	5001-11**	0,4 kg / 0,9 lb	10 / 145	15 / 220	-	18	105	57	65	-	-	-
40 / Ø70	1 1/2" BSP (ISO 228-G 1 1/2")	Gunmetal	5001-22**	1,2 kg / 2,6 lb	10 / 145	15 / 220	-	18	105	57	65	-	-	-
40 / Ø70	1 1/2" BSP (ISO 228-G 1 1/2")	Stainless steel	5001A-44**	1,0 kg / 2,2 lb	25 / 365	37.5 / 545	-	18	108	69	79	-	-	-
-- / Ø70	1 1/2" NPT (ANSI B2.1) *	Aluminium	7466-11**	0,5 kg / 1,1 lb	10 / 145	15 / 220	-	21	107	57	65	-	-	-
-- / Ø70	1 1/2" NPT (ANSI B2.1) *	Gunmetal	7466-22**	1,2 kg / 2,6 lb	10 / 145	15 / 220	-	21	107	57	65	-	-	-
-- / Ø70	1 1/2" NPT (ANSI B2.1) *	Stainless steel	7466A-44**	1,0 kg / 2,2 lb	25 / 365	37.5 / 545	-	21	110	69	79	-	-	-
50 / Ø70	2" BSP (ISO 228-G 2)	Aluminium	5002-11**	0,5 kg / 1,1 lb	10 / 145	15 / 220	-	19	100	69	79	-	-	-
50 / Ø70	2" BSP (ISO 228-G 2)	Gunmetal	5002-22**	1,3 kg / 2,9 lb	10 / 145	15 / 220	-	19	100	69	79	-	-	-
50 / Ø70	2" BSP (ISO 228-G 2)	Stainless steel	5002A-44**	1,1 kg / 2,4 lb	25 / 365	37.5 / 545	-	19	100	69	79	-	-	-
-- / Ø70	2" NPT (ANSI B2.1) *	Aluminium	7467-11**	0,5 kg / 1,1 lb	10 / 145	15 / 220	-	21,5	102	69	79	-	-	-
-- / Ø70	2" NPT (ANSI B2.1) *	Gunmetal	7467-22**	1,3 kg / 2,9 lb	10 / 145	15 / 220	-	21,5	102	69	79	-	-	-
-- / Ø70	2" NPT (ANSI B2.1) *	Stainless steel	7467A-44**	1,1 kg / 2,4 lb	25 / 365	37.5 / 545	-	21,5	103	69	79	-	-	-
50 / Ø70	S60 x 6	Aluminium	7095-11**	1,7 kg / 3,7 lb	10 / 145	15 / 220	-	19	103	70	75	-	-	-
50 / Ø70	S60 x 6	Stainless steel	7095-44**	3,7 kg / 8,2 lb	25 / 365	37.5 / 545	-	19	103	70	75	-	-	-
50 / Ø70	W2" - 7 Female Threads	Aluminium	8298-11**	0,5 kg / 1,1 lb	10 / 145	15 / 220	-	19	100	68	80	-	-	-
50 / Ø70	W2" - 7 Female Threads	Gunmetal	8298-22**	1,4 kg / 3,1 lb	10 / 145	15 / 220	-	19	100	68	80	-	-	-

HosesDirect
www.hoses.co.uk

www.hoses.co.uk
All rights to change without notice is reserved

TODO-MATIC Tank Units - couplings ø 70

TYPE 1

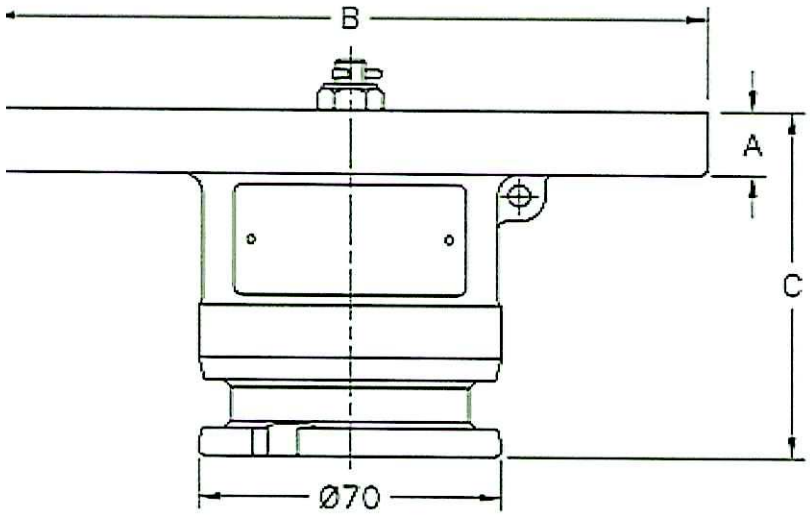

TYPE 2

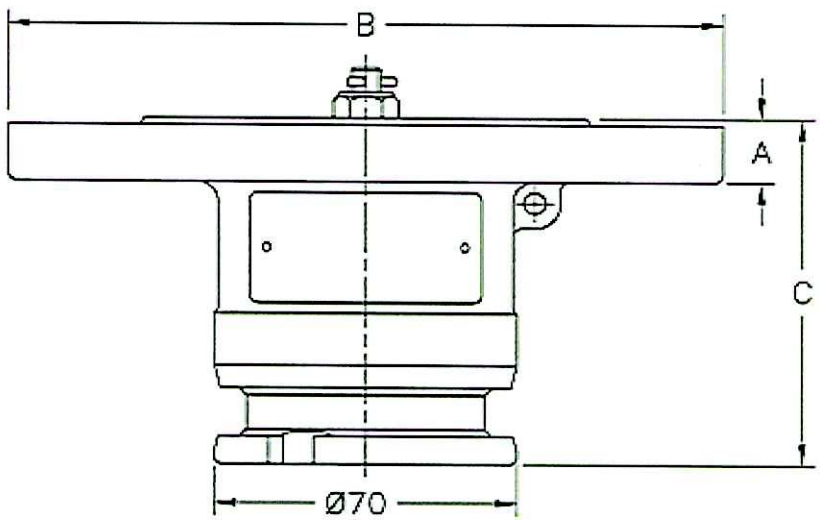

Max coupling pressure: 7 bar / 102 psi. *Drilled according to Standard only
**Sealing material, see page 4

DN / Size	B (connection)	Material	Code No.	Weight	WP Bar / Psi	TP Bar / Psi	TYPE	A	C	D	E	F	G	H
-- / Ø70	Undrilled Ø165	Aluminium	5000-11**	1,1 kg / 2,4 lb	10 / 145	15 / 220	1	15	81	-	-	-	-	-
-- / Ø70	Undrilled Ø165	Gunmetal	5000-22**	3,4 kg / 7,5 lb	10 / 145	15 / 220	1	15	81	-	-	-	-	-
40 / Ø70	ANSI B16.5 1½" ASA 150 PSI	Aluminium	5025-11**	0,7 kg / 1,5 lb	10 / 145	15 / 220	2	15	81	-	-	-	-	-
40 / Ø70	ANSI B16.5 1½" ASA 150 PSI	Gunmetal	5025-22**	2,0 kg / 4,4 lb	10 / 145	15 / 220	2	15	81	-	-	-	-	-
80 / Ø70	TW1 (DIN 28459)	Aluminium	5108-11**	0,8 kg / 1,8 lb	10 / 145	15 / 220	1	15	81	-	-	-	-	-
80 / Ø70	TW1 (DIN 28459)	Gunmetal	5108-22**	2,2 kg / 4,9 lb	10 / 145	15 / 220	1	15	81	-	-	-	-	-
-- / Ø70	ANSI B16.5 2" ASA 150 PSI	Aluminium	5109-11**	0,9 kg / 2,0 lb	10 / 145	15 / 220	2	15	81	-	-	-	-	-
-- / Ø70	ANSI B16.5 2" ASA 150 PSI	Gunmetal	5109-22**	2,8 kg / 6,2 lb	10 / 145	15 / 220	2	15	81	-	-	-	-	-
40 / Ø70	EN 1092-1* PN 10/16 Type B	Aluminium	5113-11**	0,9 kg / 2,0 lb	10 / 145	15 / 220	2	15	81	-	-	-	-	-
40 / Ø70	EN 1092-1* PN 10/16 Type B	Gunmetal	5113-22**	2,8 kg / 6,2 lb	10 / 145	15 / 220	2	15	81	-	-	-	-	-
50 / Ø70	EN 1092-1* PN 10/16 Type B	Aluminium	5114-11**	1,0 kg / 2,2 lb	10 / 145	15 / 220	2	15	81	-	-	-	-	-
50 / Ø70	EN 1092-1* PN 10/16 Type B	Gunmetal	5114-22**	3,1 kg / 6,8 lb	10 / 145	15 / 220	2	15	81	-	-	-	-	-

HosesDirect
www.hoses.co.uk

www.hoses.co.uk
All rights to change without notice is reserved

TODO-MATIC Tank Units - couplings ø 70

TYPE 1

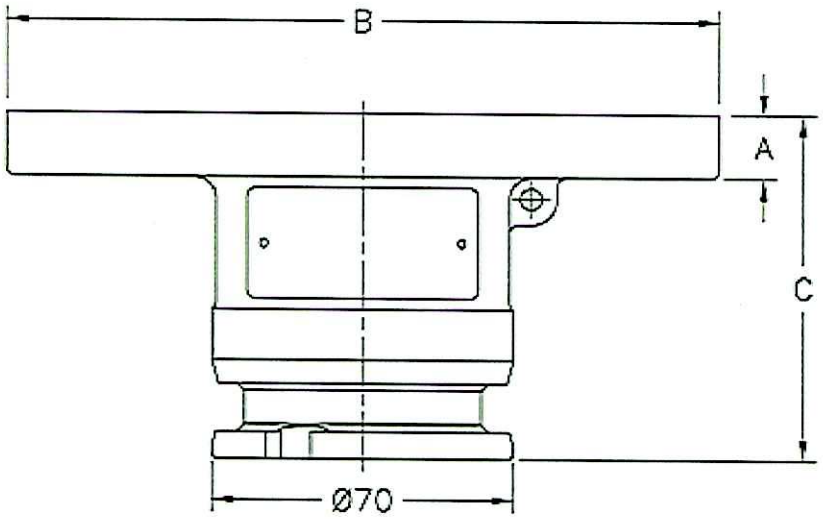

TYPE 2

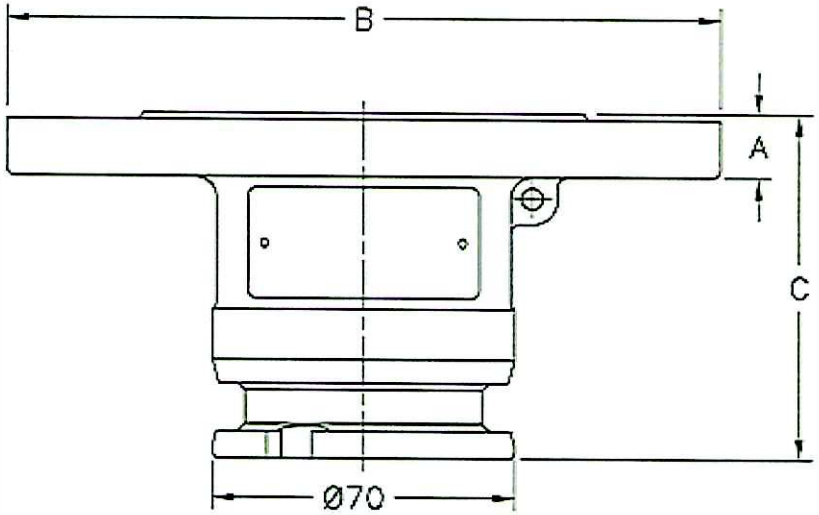

Max coupling pressure: 7 bar / 102 psi.
**Sealing material, see page 4

DN / Size	B (connection)	Material	Code No.	Weight	WP Bar / Psi	TP Bar / Psi	TYPE	A	C	D	E	F	G	H
-- / Ø70	Undrilled Ø165	Stainless steel	5000A-44**	4,1 kg / 9,0 lb	25 / 365	37,5 / 545	1	20	86	-	-	-	-	-
-- / Ø70	ANSI B16.5 1 1/2" ASA 150 PSI	Stainless steel	5025A-44**	2,8 kg / 6,2 lb	16 / 232	37,5 / 545	2	20	86	-	-	-	-	-
80 / Ø70	TW1 (DIN 28459)	Stainless steel	5108A-44**	3,5 kg / 7,7 lb	10 / 145	37,5 / 545	1	20	86	-	-	-	-	-
-- / Ø70	ANSI B16.5 2" ASA 150 PSI	Stainless steel	5109A-44**	3,5 kg / 7,7 lb	16 / 232	37,5 / 545	2	20	86	-	-	-	-	-
40 / Ø70	EN 1092-1 PN 10/16 - 25/40 Type B	Stainless steel	5113A-44**	3,5 kg / 7,7 lb	25 / 365	37,5 / 545	2	20	86	-	-	-	-	-
50 / Ø70	EN 1092-1 PN 10/16 Type B	Stainless steel	5114A-44**	4,0 kg / 8,8 lb	16 / 232	37,5 / 545	2	20	86	-	-	-	-	-
-- / Ø70	ANSI B16.5 2" ASA 300 PSI	Stainless steel	7109A-44**	3,9 kg / 8,6 lb	25 / 365	37,5 / 545	2	20	86	-	-	-	-	-
-- / Ø70	ANSI B16.5 1 1/2" ASA 300 PSI	Stainless steel	5300A-44**	3,5 kg / 7,7 lb	25 / 365	37,5 / 545	2	20	86	-	-	-	-	-
50 / Ø70	EN 1092-1 PN 25/40 Type F	Stainless steel	7500A-44**	3,5 kg / 7,7 lb	25 / 365	37,5 / 545	2	20	86	-	-	-	-	-
50 / Ø70	EN 1092-1 PN 25/40 Type E	Stainless steel	7501A-44**	3,5 kg / 7,7 lb	25 / 365	37,5 / 545	2	20	86	-	-	-	-	-
50 / Ø70	EN 1092-1 PN 25/40 Type B	Stainless steel	7502A-44**	3,5 kg / 7,7 lb	25 / 365	37,5 / 545	2	20	86	-	-	-	-	-

HosesDirect
www.hoses.co.uk

www.hoses.co.uk
All rights to change without notice is reserved

TODO-MATIC Tank Units - couplings ø 105

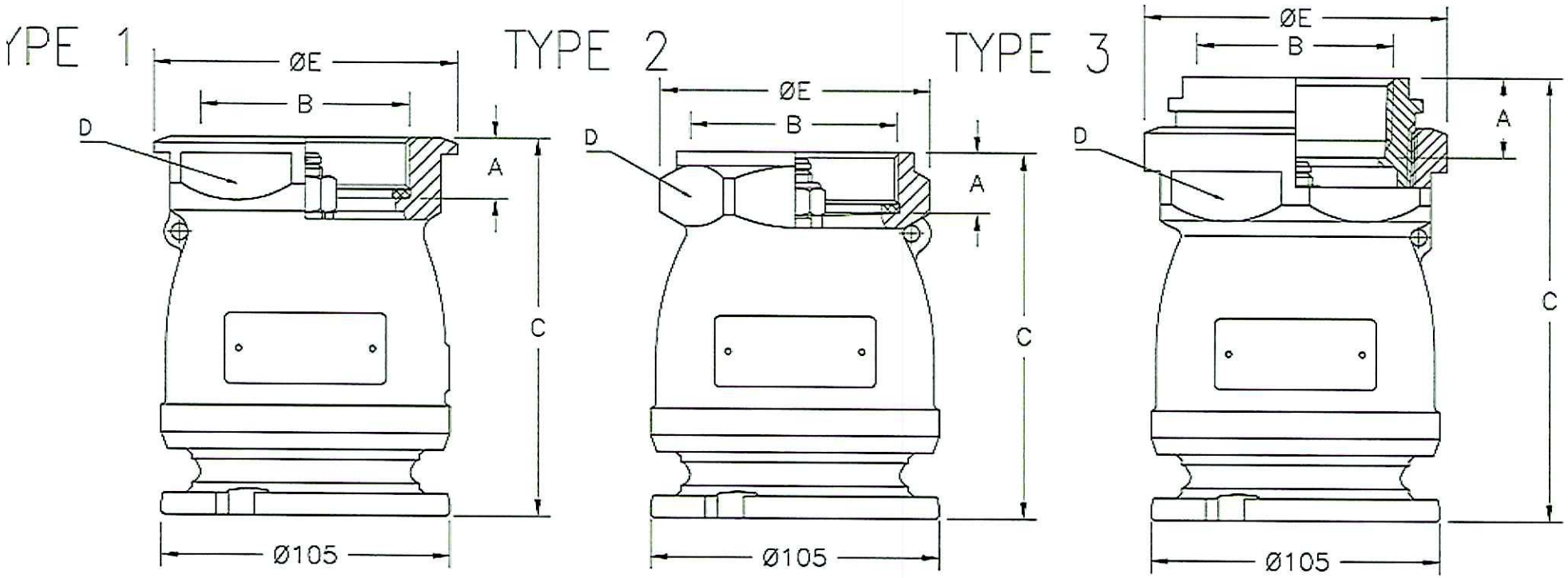

oupling pressure: 7 bar / 102 psi.
ing material, see page 4

* NPT thread is a tapered pipe thread, tightening on the tread. Therefore there is no flat seal.

DN / Size	B (connection)	Material	Code No.	Weight	WP Bar / Psi	TP Bar / Psi	TYPE	A	C	D	E	F	G	H
65 / Ø105	2 1/2" BSP (ISO 228-G 2 1/2)	Aluminium	5331C-11**	1,0 kg / 2,2 lb	10 / 145	15 / 220	2	22	134	86	98	-	-	-
65 / Ø105	2 1/2" BSP (ISO 228-G 2 1/2)	Gunmetal	5331C-22**	3,0 kg / 6,6 lb	10 / 145	15 / 220	2	22	134	86	98	-	-	-
65 / Ø105	2 1/2" BSP (ISO 228-G 2 1/2)	Stainless steel	5331X-44**	2,9 kg / 6,4 lb	25 / 365	37,5 / 545	1	22,5	138	98	110	-	-	-
-- / Ø105	2 1/2" NPT (ANSI B2.1) *	Aluminium	7470C-11**	1,6 kg / 3,5 lb	10 / 145	15 / 220	3	29	162	98	110	-	-	-
-- / Ø105	2 1/2" NPT (ANSI B2.1) *	Gunmetal	7470C-22**	3,4 kg / 7,5 lb	10 / 145	15 / 220	3	29	162	98	110	-	-	-
-- / Ø105	2 1/2" NPT (ANSI B2.1) *	Stainless steel	7470X-44**	3,0 kg / 6,6 lb	25 / 365	37,5 / 545	3	29	162	98	110	-	-	-
80 / Ø105	3" BSP (ISO 228-G 3	Aluminium	5431C-11**	0,9 kg / 2,0 lb	10 / 145	15 / 220	1	22	134	98	110	-	-	-
80 / Ø105	3" BSP (ISO 228-G 3	Gunmetal	5431C-22**	2,9 kg / 6,4 lb	10 / 145	15 / 220	1	22	134	98	110	-	-	-
80 / Ø105	3" BSP (ISO 228-G 3	Stainless steel	5431X-44**	2,7 kg / 6,0 lb	25 / 365	37,5 / 545	1	22	134	98	110	-	-	-
-- / Ø105	3" NPT (ANSI B2.1) *	Aluminium	7471C-11**	0,9 kg / 2,0 lb	10 / 145	15 / 220	1	32	144	98	110	-	-	-
-- / Ø105	3" NPT (ANSI B2.1) *	Gunmetal	7471C-22**	2,8 kg / 6,2 lb	10 / 145	15 / 220	1	32	144	98	110	-	-	-
-- / Ø105	3" NPT (ANSI B2.1) *	Stainless steel	7471X-44**	2,5 kg / 5,5 lb	25 / 365	37,5 / 545	1	32	144	98	110	-	-	-

HosesDirect
www.hoses.co.uk

www.hoses.co.uk
All rights to change without notice is reserved

TODO-MATIC Tank Units - couplings ø 105

TYPE 1

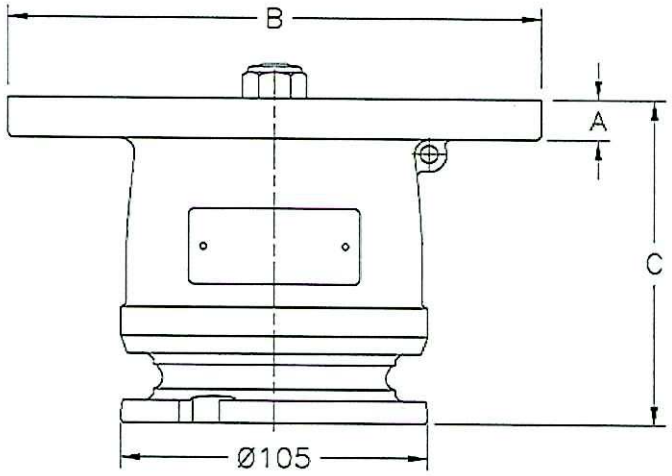

TYPE 2

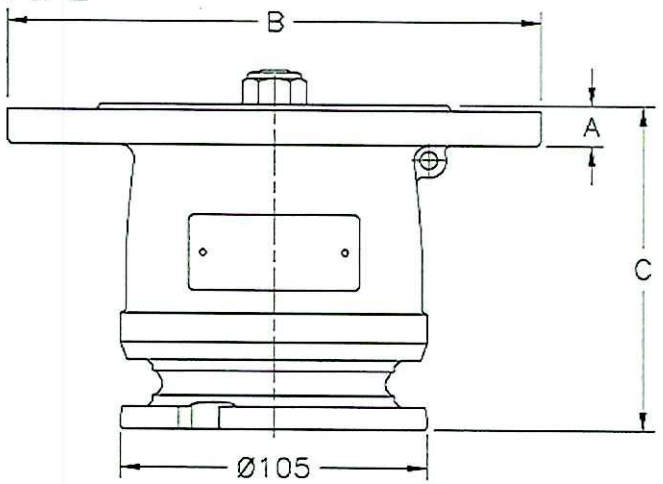

ıx coupling pressure: 7 bar / 102 psi. *Drilled according to Standard only
**Sealing material, see page 4

DN / Size	B (connection)	Material	Code No.	Weight	WP Bar / Psi	TP Bar / Psi	TYPE	A	C	D	E	F	G	H
-- / Ø105	Undrilled Ø182	Aluminium	5400C-11**	1,6 kg / 3,5 lb	10 / 145	15 / 220	1	14	112	-	-	-	-	-
-- / Ø105	Undrilled Ø182	Gunmetal	5400C-22**	4,8 kg / 10,6 lb	10 / 145	15 / 220	1	14	112	-	-	-	-	-
-- / Ø105	Undrilled Ø182	Stainless steel	5400C-44**	4,2 kg / 9,3 lb	25 / 365	37,5 / 545	1	14	112	-	-	-	-	-
65 / Ø105	EN 1092-1* PN 10/16 Type B	Aluminium	5329C-11**	1,4 kg / 3,1 lb	10 / 145	15 / 220	2	14	112	-	-	-	-	-
65 / Ø105	EN 1092-1* PN 10/16 Type B	Gunmetal	5329C-22**	4,4 kg / 9,7 lb	10 / 145	15 / 220	2	14	112	-	-	-	-	-
65 / Ø105	EN 1092-1 PN 10/16 Type B	Stainless steel	5329C-44**	3,9 kg / 8,6 lb	16 / 232	37,5 / 545	2	14	112	-	-	-	-	-
-- / Ø105	ANSI B16.5 2 1/2" ASA 150 PSI	Aluminium	5306C-11**	1,5 kg / 3,3 lb	10 / 145	15 / 220	2	14	112	-	-	-	-	-
-- / Ø105	ANSI B16.5 2 1/2" ASA 150 PSI	Gunmetal	5306C-22**	4,6 kg / 10,1 lb	10 / 145	15 / 220	2	14	112	-	-	-	-	-
-- / Ø105	ANSI B16.5 2 1/2" ASA 150 PSI	Stainless steel	5306C-44**	4,0 kg / 8,8 lb	16 / 232	37,5 / 545	2	14	112	-	-	-	-	-
80 / Ø105	EN 1092-1* PN 10/16 Type B	Aluminium	5340C-11**	1,7 kg / 3,7 lb	10 / 145	15 / 220	2	14	112	-	-	-	-	-
80 / Ø105	EN 1092-1* PN 10/16 Type B	Gunmetal	5340C-22**	5,2 kg / 11,5 lb	10 / 145	15 / 220	2	14	112	-	-	-	-	-
80 / Ø105	EN 1092-1 PN 10/16 Type B	Stainless steel	5340C-44**	4,6 kg / 10,1 lb	16 / 232	37,5 / 545	2	14	112	-	-	-	-	-
-- / Ø105	ANSI B16.5 3" ASA 150 PSI	Aluminium	5405C-11**	1,5 kg / 3,3 lb	10 / 145	15 / 220	2	14	112	-	-	-	-	-
-- / Ø105	ANSI B16.5 3" ASA 150 PSI	Gunmetal	5405 C-22**	4,6 kg / 10,1 lb	10 / 145	15 / 220	2	14	112	-	-	-	-	-
-- / Ø105	ANSI B16.5 3" ASA 150 PSI	Stainless steel	5405C-44**	4,0 kg / 8,8 lb	16 / 232	37,5 / 545	2	14	112	-	-	-	-	-
80 / Ø105	TW1 (DIN 28459)	Aluminium	5330C-11**	1,3 kg / 2,9 lb	10 / 145	15 / 220	1	14	112	-	-	-	-	-
80 / Ø105	TW1 (DIN 28459)	Gunmetal	5330C-22**	3,8 kg / 8,4 lb	10 / 145	15 / 220	1	14	112	-	-	-	-	-
80 / Ø105	TW1 (DIN 28459)	Stainless steel	5330C-44**	3,3 kg / 7,3 lb	10 / 145	37,5 / 545	1	14	112	-	-	-	-	-
100 / Ø105	TW3 (DIN 28459)	Aluminium	7137C-11**	1,4 kg / 3,1 lb	10 / 145	15 / 220	1	14	112					
100 / Ø105	TW3 (DIN 28459)	Gunmetal	7137C-11**	4,5 kg / 9,9 lb	10 / 145	15 / 220	1	14	112					

HosesDirect
www.hoses.co.uk

www.hoses.co.uk
All rights to change without notice is reserved

TODO-MATIC Tank Units - couplings ø 119

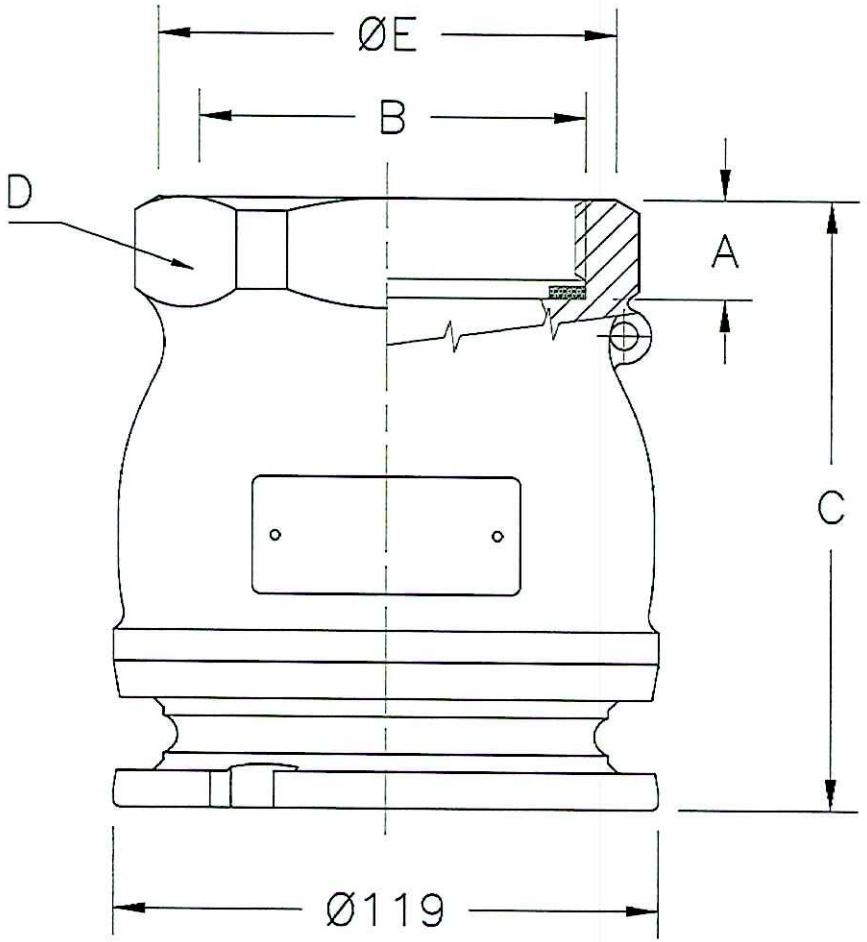

›upling pressure: 7 bar / 102 psi.
ng material, see page 4

* NPT thread is a tapered pipe thread, tightening on the tread. Therefore there is no flat seal.

DN / Size	B (connection)	Material	Code No.	Weight	WP Bar / Psi	TP Bar / Psi	TYPE	A	C	D	E	F	G	H
80 / Ø119	3" BSP (ISO 228 -G 3)	Aluminium	5531C-11**	1,2 kg / 2,6 lb	10 / 145	15 / 220	-	22	134	101	110	-	-	-
80 / Ø119	3" BSP (ISO 228 -G 3)	Gunmetal	5531C-22**	3,8 kg / 8,4 lb	10 / 145	15 / 220	-	22	134	101	110	-	-	-
80 / Ø119	3" BSP (ISO 228 -G 3)	Stainless steel	5531X-44**	3,7 kg / 8,2 lb	25 / 365	37,5 / 545	-	22	134	101	110	-	-	-
– / Ø119	3" NPT (ANSI B2.1) *	Aluminium	7474C-11**	1,2 kg / 2,6 lb	10 / 145	15 / 220	-	32	144	101	110	-	-	-
– / Ø119	3" NPT (ANSI B2.1) *	Gunmetal	7474C-22**	3,8 kg / 8,4 lb	10 / 145	15 / 220	-	32	144	101	110	-	-	-
– / Ø119	3" NPT (ANSI B2.1) *	Stainless steel	7474X-44**	3,7 kg / 8,2 lb	25 / 365	37,5 / 545	-	32	144	101	110	-	-	-

HosesDirect
www.hoses.co.uk

www.hoses.co.uk
All rights to change without notice is reserved

TODO-MATIC Tank Units - couplings ø 119

TYPE 1

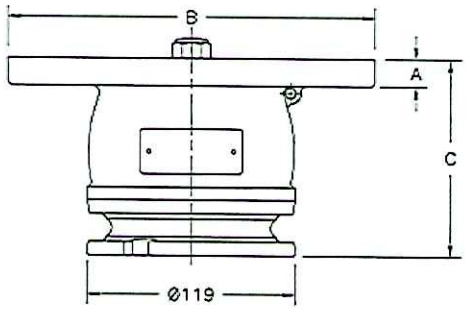

TYPE 2

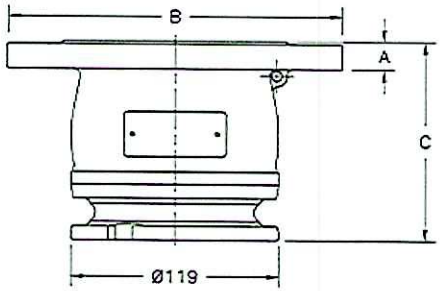

TYPE 3

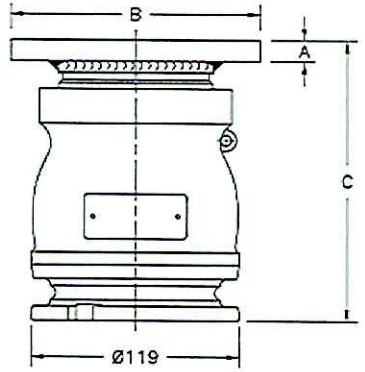

Max coupling pressure: 7 bar / 102 psi. *Drilled according to Standard only
**Sealing material, see page 4

DN / Size	B (connection)	Material	Code No.	Weight	WP Bar / Psi	TP Bar / Psi	TYPE	A	C	D	E	F	G	H
-- / Ø119	Undrilled Ø220	Aluminium	5500C-11**	1,8 kg / 4,0 lb	10 / 145	15 / 220	1	14	112	-	-	-	-	-
-- / Ø119	Undrilled Ø220	Gunmetal	5500C-22**	5,6 kg / 12,3 lb	10 / 145	15 / 220	1	14	112	-	-	-	-	-
-- / Ø119	Undrilled Ø220	Stainless steel	5500D-44**	7,4 kg / 16,3 lb	25 / 365	37,5 / 545	1	16	115	-	-	-	-	-
-- / Ø119	ANSI B16.5 3" ASA 150 PSI	Aluminium	5505C-11**	1,8 kg / 4,0 lb	10 / 145	15 / 220	1	14	112	-	-	-	-	-
-- / Ø119	ANSI B16.5 3" ASA 150 PSI	Gunmetal	5505C-22**	5,6 kg / 12,3 lb	10 / 145	15 / 220	1	14	112	-	-	-	-	-
-- / Ø119	ANSI B16.5 3" ASA 150 PSI	Stainless steel	5505D-44**	7,4 kg / 16,3 lb	16 / 232	37,5 / 545	2	16	115	-	-	-	-	-
80 / Ø119	EN 1092-1* PN 10/16 Type B	Aluminium	5544C-11**	1,7 kg / 3,7 lb	10 / 145	15 / 220	1	14	112	-	-	-	-	-
80 / Ø119	EN 1092-1* PN 10/16 Type B	Gunmetal	5544C-22**	5,0 kg / 11,0 lb	10 / 145	15 / 220	1	14	112	-	-	-	-	-
80 / Ø119	EN 1092-1 PN 10/16 Type B	Stainless steel	5544D-44**	6,0 kg / 13,2 lb	16 / 232	37,5 / 545	2	16	115	-	-	-	-	-
80 / Ø119	TW1 (DIN 28459)	Aluminium	5592C-11**	1,5 kg / 3,3 lb	10 / 145	15 / 220	1	14	112	-	-	-	-	-
80 / Ø119	TW1 (DIN 28459)	Gunmetal	5592C-22**	4,2 kg / 9,3 lb	10 / 145	15 / 220	1	14	112	-	-	-	-	-
80 / Ø119	TW1 (DIN 28459)	Stainless steel	5592D-44**	6,7 kg / 14,8 lb	10 / 145	37,5 / 545	1	16	115	-	-	-	-	-
100 / Ø119	EN 1092-1 PN 10/16 Type B	Stainless steel	6855D-44**	7,0 kg / 15,4 lb	16 / 232	37,5 / 545	2	16	115	-	-	-	-	-
-- / Ø119	ANSI B16.5 3" ASA 300 PSI	Stainless steel	7505D-44**	7,2 kg / 15,9 lb	25 / 365	37,5 / 545	2	29	115	-	-	-	-	-
80 / Ø119	EN 1092-1 PN 25/40 Type F	Stainless steel	5498D-44**	7,1 kg / 15,7 lb	25 / 365	37,5 / 545	2	29	115	-	-	-	-	-
80 / Ø119	EN 1092-1 PN 25/40 Type B	Stainless steel	5503D-44**	8,4 kg / 18,5 lb	25 / 365	37,5 / 545	2	29	115	-	-	-	-	-
80 / Ø119	EN 1092-1 PN 25/40 Type E	Stainless steel	5501D-44	8,0 kg / 17,6 lb	25 / 365	37,5 / 545	2	29	115	-	-	-	-	-
100 / Ø119	TW3 (DIN 28459)	Aluminium	5546C-11**	1,7 kg / 3,7 lb	10 / 145	15 / 220	1	14	112	-	-	-	-	-
100 / Ø119	TW3 (DIN 28459)	Gunmetal	5546C-22**	4,4 kg / 9,7 lb	10 / 145	15 / 220	1	14	112	-	-	-	-	-
100 / Ø119	TW3 (DIN 28459)	Stainless steel	5546D-44**	6,5 kg / 14,3 lb	10 / 145	37,5 / 545	1	16	115	-	-	-	-	-
-- / Ø119	4" T.T.M.A (RP No. 28)	Aluminium	5820C-11**	1,7 kg / 3,7 lb	10 / 145	15 / 220	1	14	112	-	-	-	-	-
-- / Ø119	4" T.T.M.A (RP No. 28)	Gunmetal	5820C-22**	4,4 kg / 9,7 lb	10 / 145	15 / 220	1	14	112	-	-	-	-	-
-- / Ø119	4" T.T.M.A (RP No. 28)	Stainless steel	5820D-44**	3,9 kg / 8,6 lb	10 / 145	37,5 / 545	1	16	115	-	-	-	-	-
-- / Ø119	3" T.T.M.A (RP No. 28)	Aluminium	5819C-11**	1,5 kg / 3,3 lb	10 / 145	15 / 220	3	12	162	-	-	-	-	-

hosesDirect
www.hoses.co.uk

www.hoses.co.uk
All rights to change without notice is reserved

TODO-MATIC Tank Units - couplings ø 164

TYPE 1

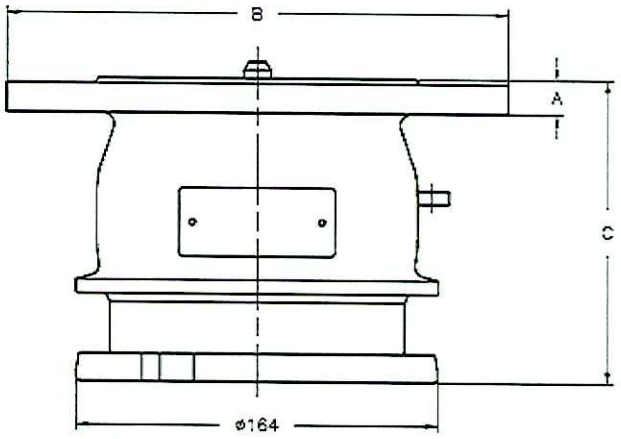

TYPE 2

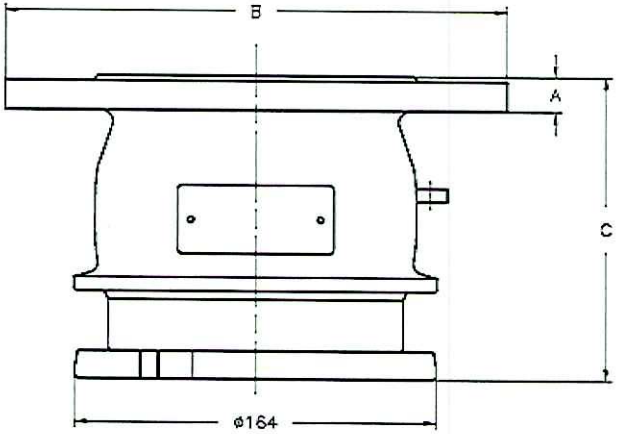

TYPE 3

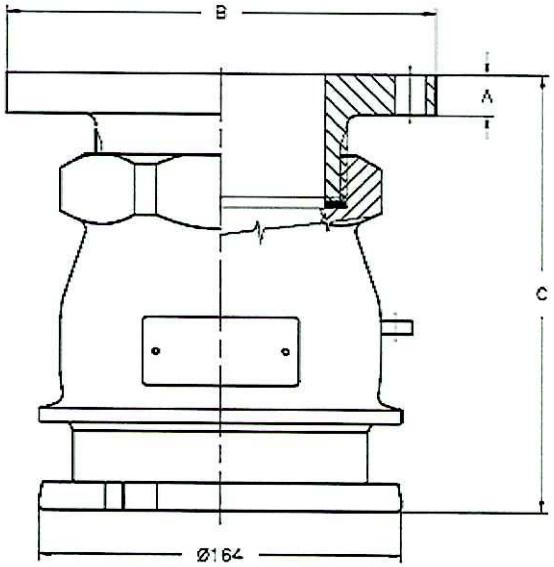

Max coupling pressure: 7 bar / 102 psi. *Drilled according to Standard only
** Sealing material, see page 4

DN / Size	B (connection)	Material	Code No.	Weight	WP Bar / Psi	TP Bar / Psi	TYPE	A	C	D	E	F	G	H
-- / Ø164	ANSI B16.5 4" ASA 150 PSI	Aluminium	5600-11**	4,5 kg / 9,9 lb	10 / 145	15 / 220	1	20	138	-	-	-	-	-
-- / Ø164	ANSI B16.5 4" ASA 150 PSI	Gunmetal	5600-22**	10,9 kg / 24,0 lb	10 / 145	15 / 220	1	20	138	-	-	-	-	-
-- / Ø164	ANSI B16.5 4" ASA 150 PSI	Stainless steel	5800D-44**	12,0 kg / 26,5 lb	16 / 232	37,5 / 545	2	25	148	-	-	-	-	-
100 / Ø164	EN 1092-1* PN 10/16 Type B	Aluminium	5695-11**	4,3 kg / 9,5 lb	10 / 145	15 / 220	1	20	138	-	-	-	-	-
100 / Ø164	EN 1092-1* PN 10/16 Type B	Gunmetal	5695-22**	10,7 kg / 23,6 lb	10 / 145	15 / 220	1	20	138	-	-	-	-	-
100 / Ø164	EN 1092-1 PN 10/16 Type B	Stainless steel	6600D-44**	11,7 kg / 25,8 lb	16 / 232	37,5 / 545	2	25	148	-	-	-	-	-
100 / Ø164	TW3 (DIN 28459)	Aluminium	5696-11**	4,3 kg / 9,5 lb	10 / 145	15 / 220	3	15	192	-	-	-	-	-
100 / Ø164	TW3 (DIN 28459)	Gunmetal	5696-22**	10,0 kg / 22,0 lb	10 / 145	15 / 220	3	15	192	-	-	-	-	-
-- / Ø164	Undrilled Ø230	Aluminium	5700-11**	4,6 kg / 10,1 lb	10 / 145	15 / 220	1	20	138	-	-	-	-	-
-- / Ø164	Undrilled Ø230	Gunmetal	5700-22**	11,9 kg / 26,2 lb	10 / 145	15 / 220	1	20	138	-	-	-	-	-
-- / Ø164	Undrilled Ø230	Stainless steel	6300D-44**	12,8 kg / 28,2 lb	25 / 365	37,5 / 545	2	25	148	-	-	-	-	-
-- / Ø164	4" T.T.M.A (RP No. 28)	Stainless steel	5674D-44**	10,8 kg / 23,8 lb	10 / 145	37,5 / 545	2	25	140	-	-	-	-	-
-- / Ø164	4" T.T.M.A (RP No. 28)	Aluminium	7147-11**	4,3 kg / 9,5 lb	10 / 145	15 / 220	3	15	192	-	-	-	-	-

www.hoses.co.uk

www.hoses.co.uk
All rights to change without notice is reserved

TODO-MATIC Tank Units - couplings ø 164

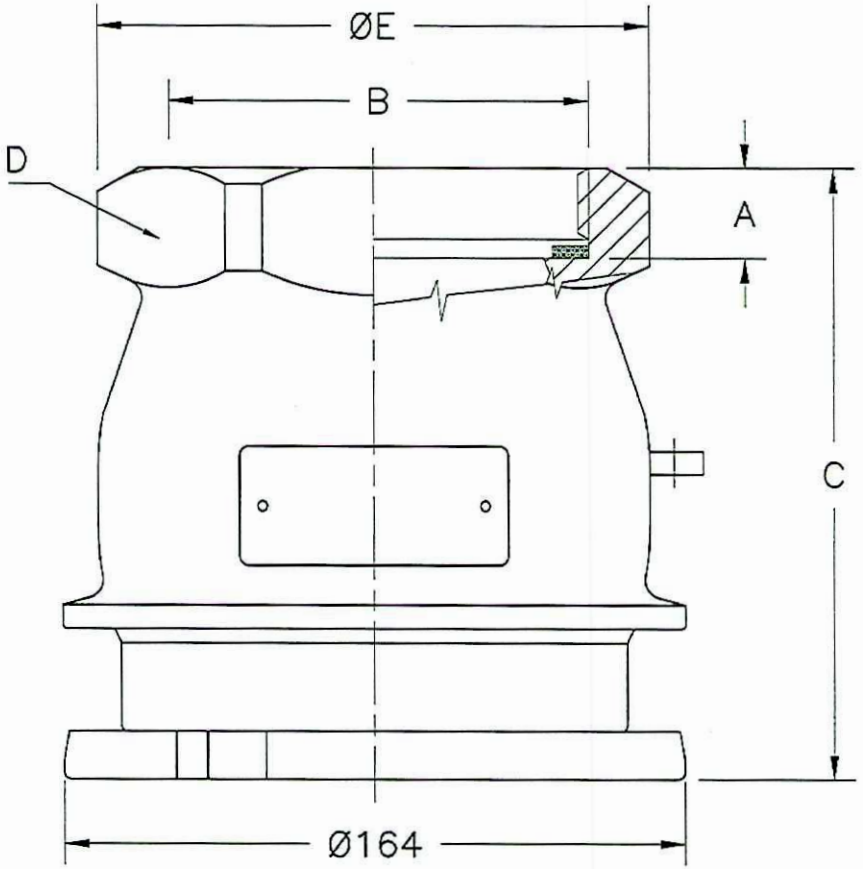

Max coupling pressure: 7 bar / 102 psi.

* NPT thread is a tapered pipe thread, tightening on the tread. Therefore there is no flat seal.
** Sealing material, see page 4
*** A = Changeable coupling flange. B = Unchangeable coupling flange.

DN / Size	B (connection)	Material	Code No.	Weight	WP Bar / Psi	TP Bar / Psi	TYPE	A	C	D	E	F	G	H
100 / Ø164	4" BSP (ISO 228-G 4)	Aluminium	5631-11**	3,4 kg / 7,5 lb	10 / 145	15 / 220	A ***	24	162	130	162	-	-	-
100 / Ø164	4" BSP (ISO 228-G 4)	Gunmetal	5631-22**	7,5 kg / 16,5 lb	10 / 145	15 / 220	A ***	24	162	130	162	-	-	-
100 / Ø164	4" BSP (ISO 228-G 4)	Stainless steel	5830A-44**	6,9 kg / 15,2 lb	25 / 365	37,5 / 545	B ***	24	164	130	164	-	-	-
-- / Ø164	4" NPT (ANSI B2.1) *	Aluminium	7476-11**	3,4 kg / 7,5 lb	10 / 145	15 / 220	A ***	34	172	130	172	-	-	-
-- / Ø164	4" NPT (ANSI B2.1) *	Gunmetal	7476-22**	7,5 kg / 16,5 lb	10 / 145	15 / 220	A ***	34	172	130	172	-	-	-
-- / Ø164	4" NPT (ANSI B2.1) *	Stainless steel	7480A-44**	6,9 kg / 15,2 lb	25 / 365	37,5 / 545	B ***	34	172	130	173	-	-	-

www.noses.co.uk

www.hoses.co.uk
All rights to change without notice is reserved

TODO-MATIC Tank Units - couplings ø 238

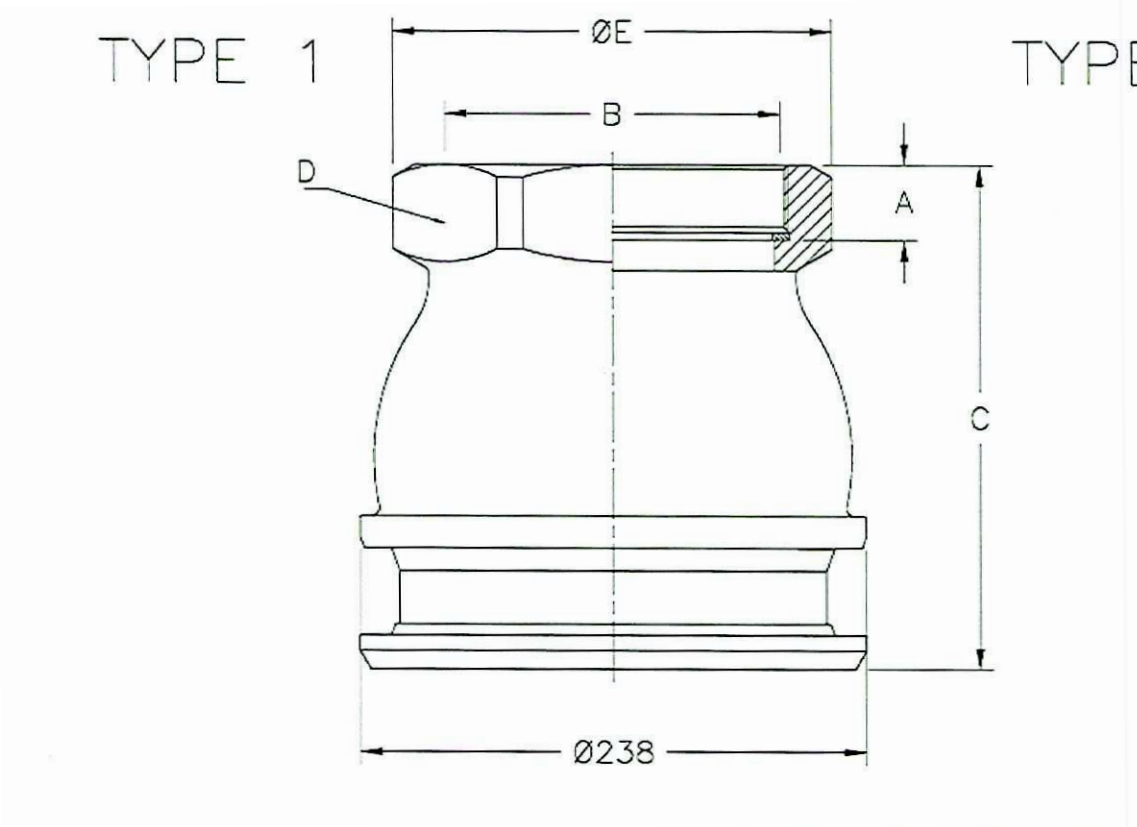

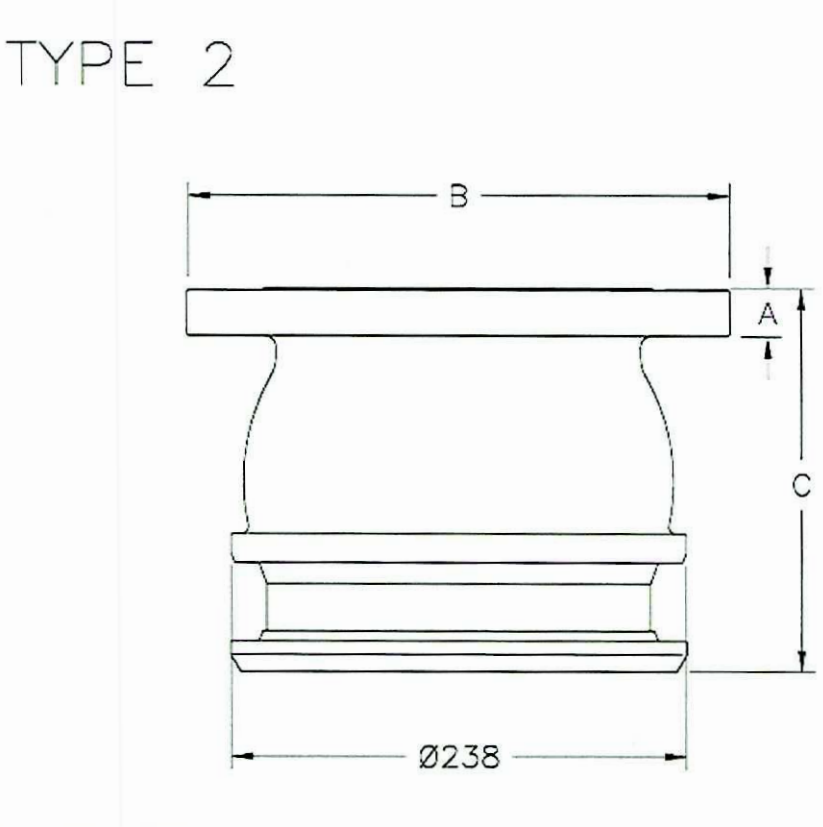

Max coupling pressure: 7 bar / 102 psi.
***Drilled according to Standard only

* NPT thread is a tapered pipe thread, tightening on the tread. Therefore there is no flat seal.
** Sealing material, see page 4

DN / Size	B (connection)	Material	Code No.	Weight	WP Bar / Psi	TP Bar / Psi	TYPE	A	C	D	E	F	G	H
150 / Ø 238	6" BSP (ISO 228-G 6)	Aluminium	7210-11**	11,5 kg / 25,4 lb	10 / 145	15 / 220	1	35	239	190	200	-	-	-
150 / Ø 238	6" BSP (ISO 228-G 6)	Gunmetal	7210-22**	25,0 kg / 55,1 lb	10 / 145	15 / 220	1	35	239	190	200	-	-	-
-- / Ø 238	6" NPT (ANSI B2.1) *	Aluminium	7211-11**	10,7 kg / 23,6 lb	10 / 145	15 / 220	1	40	239	190	200	-	-	-
-- / Ø 238	6" NPT (ANSI B2.1) *	Gunmetal	7211-22**	25,0 kg / 55,1 lb	10 / 145	15 / 220	1	40	239	190	200	-	-	-
150 / Ø 238	EN 1092-1*** PN 10/16 Type B	Aluminium	7212-11**	13,0 kg / 28,7 lb	10 / 145	15 / 220	2	24	200	-	-	-	-	-
150 / Ø 238	EN 1092-1*** PN 10/16 Type B	Gunmetal	7212-22**	28,0 kg / 61,7 lb	10 / 145	15 / 220	2	24	200	-	-	-	-	-
150 / Ø 238	EN 1092-1 PN 10/16 Type B	Stainless steel	7212A-44**	26,0 kg / 57,3 lb	16 / 232	15 / 220	2	24	200	-	-	-	-	-
150 / Ø 238	ANSI B16.5 6" ASA 150 PSI	Aluminium	7212-11**	13,0 kg / 28,7 lb	10 / 145	15 / 220	2	24	200	-	-	-	-	-
150 / Ø 238	ANSI B16.5 6" ASA 150 PSI	Gunmetal	7212-22**	28,0 kg / 61,7 lb	10 / 145	15 / 220	2	24	200	-	-	-	-	-
150 / Ø 238	ANSI B16.5 6" ASA 150 PSI	Stainless steel	7212A-44**	26,0 kg / 57,3 lb	16 / 232	15 / 220	2	24	200	-	-	-	-	-

www.hoses.co.uk

www.hoses.co.uk
All rights to change without notice is reserved